MCO 280

Department of Health and Social Security
and the Welsh Office

Health
Technical
Memorandum 81

FIRECODE

Fire Precautions in New Hospitals

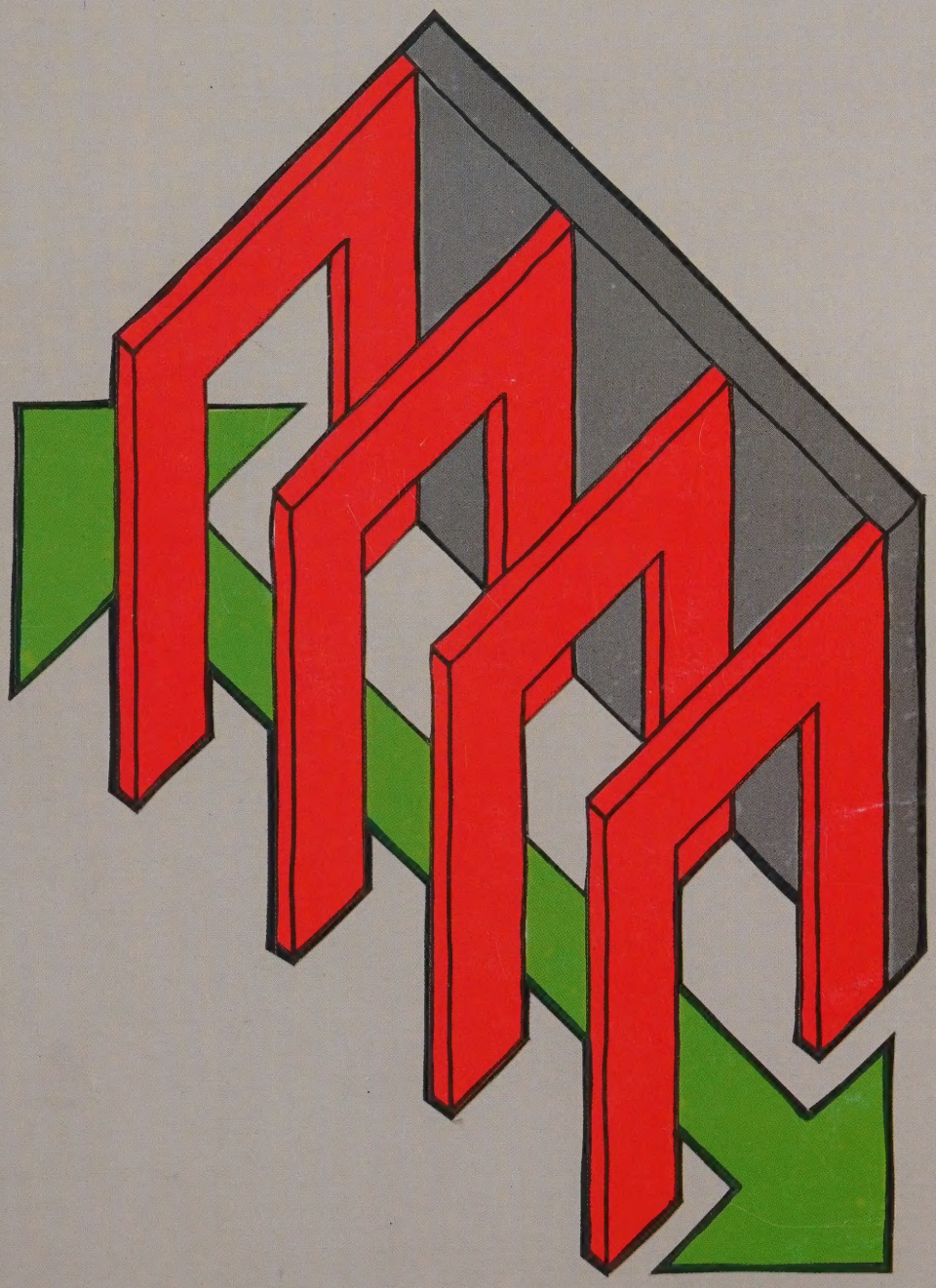

FIRECODE brings together in one comprehensive suite of documents the Department's policy and technical guidance on fire precautions in hospitals and other NHS premises.

Basic policy, principles and key management guidance are contained in *Firecode: Policy and Principles.* Other *FIRECODE* documents include the *Health Technical Memoranda* '80' series (which give technical guidance on various building, engineering and equipment issues) and the *Fire Practice Notes* series (dealing with various specialist aspects of fire precautions) and Nucleus guidance. Existing HTMs will, in due course, be reissued in *FIRECODE* format. The suite includes *Firecode: Directory of Fire Documents* which lists references to relevant legislation and relevant fire precautions guidance issued by non-DHSS sources (as, for example, the Home Office).

For the convenience of the user, a *FIRECODE* binder and slip case are available for the storage of the constituent *FIRECODE* documents. The binder includes details of the publications which make up *FIRECODE.*
The *FIRECODE* binder, reference ISBN 0 11 321097 3, is available from HMSO Books, PO Box 276, Nine Elms Lane, London SW8 5DT.

Department of Health and Social Security
Health Building Directorate
and the Welsh Office

FIRECODE

Fire Precautions in New Hospitals

Health Technical Memorandum 81

London
Her Majesty's Stationery Office

© Crown copyright 1987
First published 1987

ISBN 0 11 321082 5

CONTENTS

Page

1 Introduction 3

2 Scope 4

New Hospitals
New Hospital Extensions
Major Alterations
Change of Use
Existing Buildings
DHSS Nucleus Hospital

3 Fire Precautions Act 5

4 The Building Regulations 6

Compliance with the Building Regulations
Additional Statutory Provisions
Purpose Groups
Separation of Buildings

5 Consultation 8

Client/Architect/Engineers
Local Fire Authority
Client/Staff
Health & Safety Executive

6 Fire Risk Separation 9

Life and Fire Risk/Load Areas

7 Progressive horizontal evacuation 10

8 Compartments 12

Compartmentation
Hospitals and Hospital Extensions With Hospital Streets
Hospital Extensions without Hospital Streets
Structural Requirements
Additional Requirements
Wards — Means of Escape Relaxation
Compartment/Department Relationship
Travel Distances
Small Detached Hospital Extensions

9 Sub-compartments 16

Sub-Compartmentation
Structural Requirements
Sub-compartment/Department Relationship
Travel Distances

10 Fire resisting construction other than compartments and sub-compartments 18

One Hour or More Fire Resisting Construction
Half Hour Fire Resisting Construction

Page

11 Additional structural/constructional aspects 19

Height Limitation
High Rise Hospitals
External Elevation
Tower and Podium Situation
Basement Accommodation
Re-entrant Angles
Courtyards, Lightwells and Opposite Elevations of the Same Building
Internal Surfaces and Finishes
Plastic Material for Glazing
Suspended Ceilings
Cavity Barriers and Fire Stopping
uPVC Pipework
Furniture, Fixtures and Fittings
Glazing — Safety
Safety — General
Atria

12 Car parking 25

13 Additional considerations and precautions for wards 26

14 Fire hazard rooms and areas 27

Structural Requirements
Fire Hazard Rooms and Areas

15 Mechanical and electrical services accommodation and electrical distribution 29

Plant Rooms
Electrical Distribution
Travel Distances

16 Hospital street/main communication route 31

17 Means of escape 33

Escape Route
Alternative Means of Escape
Single Direction of Escape
Location of Alternative Exits
Emergency Exits
Door Recesses
Courtyards
Circulation Spaces
Floors of Escape Routes
Height of Escape Routes
Width of Escape Routes
Final Exits

Page

External Escape Routes at Ground Level
Unenclosed Escape Routes Across Roofs
Enclosed Escape Routes Across Roofs and Across Bridges
Escape Routes from Roof Spaces and Ceiling Voids
Phased Developments
Travel Distances
Assembly Rooms

18 Escape stairways, lifts, bedlifts and protected lobbies 40

Stairways
Protected Shafts
Number and Siting of Stairways
Stairway Design
Protected Escape Route
Mattress Evacuation
Protected Lobbies
Lifts
Escape Bed Lifts

19 Fire brigade access — stairways and fire lifts 46

Firefighting Stairways
Firefighting Lifts

20 Fire resisting doorsets 47

Fire Resisting Doorsets
Automatic Self Closing Devices
Door Hold Open Devices
Panic Bars
Location For Fire Resisting Doorsets

21 Active fire precautions 49

Fire Alarm and Detection Systems
First Aid Fire Fighting Equipment
Hosereels
Portable Fire Extinguishers
Fixed Fire Extinguishing Equipment

Page

Sprinklers
Total and Partial Flooding Systems
Hydrant Systems
Wet and Dry Risers
Foam Inlets
Escape Lighting

22 Mechanical and electrical services 52

Mechanical Ventilation and Air Conditioning Systems
Fire Shutters
Location of Fire Shutters
Fire Hazard Rooms
Non Acute Geriatric and Non Acute Mental Illness Wards
Fire Hazard Rooms and Areas
Cavity Barriers
Transfer Grilles
Fire Stopping
Door Hold Open Devices

23 Fire drawings 55

Appendix 1 63

Glossary of Terms

Appendix 2 66

Fires in Different Parts of Hospitals

Appendix 3 67

Risk Categories

Appendix 4 68

Protection of Re-entrant Angles

Appendix 5 73

Access for Fire Brigade Appliances

Appendix 6 75

Fire Practice Notes

Index 76

1 Introduction

General

1.1 This Technical Memorandum sets down general principles and recommendations for guidance in the layout, design and construction of NEW non-Nucleus hospitals, NEW hospital extensions and major alterations to ensure effective means of escape for the occupants in the event of fire. It supersedes the existing guidance contained in Hospital Design Note No 2 published in 1965, and parts of Hospital Technical Memorandum No 16 published in 1969, and draft HTM Fire Safety in Health Buildings dated September 1978.

National Fire Policy Advisory Group

1.2 This Memorandum has been prepared by the National Fire Policy Advisory Group which is fully representative of DHSS, the Home Office Fire Services Inspectorate, the Department of Environment Building Regulations Division, the Fire Research Station and the works professionals, doctors and nurses representing the National Health Service.

1.3 The central purpose of this document is to develop an understanding of the nature of the problems special to hospitals so that the current statutory regulations can be applied sensibly within a framework of understanding. It is not possible to make comprehensive recommendations capable of covering every risk. The design of parts of hospitals varies and even where two parts are similar in design it is unlikely that they will be used in identical ways. A flexible application of the principles incorporated in the recommendations is, therefore, essential in order to achieve buildings with reasonable conditions for escape that are compatible with design and user requirements.

1.4 Means of escape constitutes only one aspect of fire safety. Structural fire precautions, care in the design, siting and protection of engineering services and responsible management and house-keeping are also important factors which can contribute towards the safeguarding of the lives of occupants in a hospital should a fire occur.

1.5 The recommendations of this HTM assume that the occupants of hospitals will include a proportion of handicapped or disabled people and that, in the design of the building, no reliance is placed on external rescue by the fire brigade or manipulative types of escape appliances such as chutes or portable ladders. This HTM therefore, is prepared on the basis that the occupants of any part of a hospital should be able to move to a place of safety in an emergency without assistance other than from staff.

1.6 This HTM should be read in conjunction with the recommendations contained in:

HTM 82 Fire Alarm and Detection Systems.

HTM 83 General Fire Precautions.

HTM 87 Furniture, Furnishings, Bed Assemblies, Apparel.

Several circulars have been issued by DHSS and the Welsh Office and these are referred to in paragraph 4.5.

2 Scope

General

2.1 With the exception of the DHSS Nucleus Hospital (see paragraphs 2.6 to 2.8) this guidance applies to:

a. New hospitals.

b. Major new hospital extensions to existing buildings.

c. Major alterations to existing hospitals.*

d. Change of use of an existing building into a hospital.

e. Those parts of new non-hospital extensions to existing hospitals which incorporate patient escape routes from the existing hospital.

2.2 This guidance does not apply to:

a. The upgrading of existing hospitals, except the upgrading of hospitals designed and built in accordance with this HTM or the earlier draft dated September 1978.

b. The building types listed in paragraph 2.3.

2.3 Separate guidance documents for Personal Social Services buildings are currently in preparation and will include the following building types:

a. Adult training centres

b. Community homes

c. Day centres

d. Day nurseries

e. Residential accommodation for elderly people

f. Residential accommodation for the physically and mentally handicapped and mentally ill.

2.4 This guidance is not applicable to hospitals which, at the date of issue of this HTM have reached completion of detailed design stage, provided that such designs are in accordance with the recommendations contained in "Fire Safety in Health Buildings" draft HTM dated September 1978.

Existing buildings

2.5 Any hospital designed for fire safety in accordance with the recommendations contained in this HTM is excluded from compliance with any fire safety guidance relating to existing hospitals. If, however, in the future it is considered that any aspect of fire safety guidance specifically related to existing hospitals is also relevant to new hospitals and/or that fire safety requirements additional to the recommendations contained in this HTM are necessary, then further guidance will be issued as addenda to this HTM.

The DHSS Nucleus hospital

2.6 The current DHSS Nucleus hospital design concept comprises a unique system of building, engineering and operational policies which collectively have been approved by the Home Office as satisfying the required standards of fire safety.

2.7 All Nucleus schemes must be classified as conforming to the Nucleus concept by submission to DHSS in accordance with the approvals procedures set down in the Nucleus Fire Precautions Recommendations.

2.8 Any Nucleus scheme, or part of a Nucleus scheme, submitted to DHSS in accordance with paragraph 2.7 which has not been classified as Nucleus should be designed in accordance with the recommendations of this HTM for structural fire precautions and means of escape and to the satisfaction of the local fire authority.

* It is *not* possible to accurately define 'major alterations'. Capital cost and/or area are not necessarily reliable guides. It is left to the discretion of the Health Authority, in association with the local Fire Authority, to determine which guidance is appropriate in a given situation ie the recommendations of this HTM or the Home Office Draft Guide to Fire Precautions in Hospitals (Existing).

3 Fire Precautions Act

3.1 The use of premises as a hospital is not a use designated for the purposes of section 1 of the Fire Precautions Act 1971 (which may require premises put to designated uses to have a fire certificate, issued by the fire authority). A fire certificate, issued by the Home Office Fire Services Inspectorate, is, however, required for those parts of hospitals and other health buildings which are used as factories, offices or shops in any of the following circumstances:

a. If more than 20 persons are employed in the factory etc, premises;

b. If more than 10 persons are employed therein at any one time elsewhere than on the ground floor;

c. If there are two or more factory etc, premises in a building and the aggregate number of persons employed therein exceeds 20 or 10 elsewhere than on the ground floor;

d. If explosive or highly flammable materials are stored or used in the factory etc, premises in such quantity as to constitute a serious additional risk in case of fire.

3.2 Under section 9A of the 1971 Act all factories, offices and shops are required to be provided with such means of escape in case of fire as may reasonably be required in the circumstances of the case.

3.3 The Fire Precautions (Non-Certificated Factory, Office, Shop and Railway Premises) Regulations 1976, which apply to premises which are not required to have a fire certificate, govern such matters as the direction of opening of certain doors, the marking of exits, the enclosure of hoistways and liftways, means of fastening exit doors, contents of rooms and means for fighting fire.

3.4 The Health & Safety Executive must be consulted in all cases where there is any doubt as to whether or not the premises, or part of the premises, are factories, offices or shops. For all such premises, or parts of premises, there is a statutory duty for the occupier/employer to notify the Health & Safety Executive (see parargaph 11.43).

4 The Building Regulations 1985

4.1 Health Authorities should continue to act in accordance with policy expressed in relation to earlier regulations. This means that the substantive requirements of The Building Regulations 1985 (SI 1985 1065) should be generally observed. Health Authorities should follow Amendment No 2 of CONCODE PART II, which calls for design and construction certificates in respect of The Building Regulations and Health Service Fire Standards.

4.2 The recommendations of this HTM rely on compliance with:

a. The Building Regulations 1985.

b. The practical guidance in Approval Document B2/3/4, (Fire Spread) relevant to Institutions (Hospitals).

c. The Mandatory Rules for Means of Escape in case of fire.

4.3 This HTM contains means of escape provision for new hospitals, hospital extensions, major alterations and additional structural fire precautions to those, included for hospitals, in Approved Document B2/3/4.

Additional statutory provisions

4.4 A number of Local Acts exist and all of these contain special requirements in respect of fire precautions. Some requirements may be in excess of the recommendations contained in this HTM. Health Authorities are therefore recommended to reach agreement with the local fire authority in all such cases; this can be done at the same time as the normal consultations recommended in Chapter 5.

4.5 Attention is also drawn to the fact that there may be other legislation and guidance imposing or recommending requirements for fire precautions. In this connection reference may be made to the following (which also contain the Local Acts mentioned above):

a. DHSS Register of Building Legislation (Microfiche System).

b. DHSS Firecode Directory of Fire Documents for Health Buildings.

Purpose Groups

4.6 The designation of Purpose Groups for various types of buildings and compartments is contained in Table 0.1 of Approved Document B2/3/4.

4.7 In the majority of cases the Purpose Group of a building can be determined easily and although hospitals generally fall into the Purpose Group Institutional category, there are many areas or departments the Purpose Group of which cannot be determined by use of Table 0.1 in Approved Document B2/3/4. This is particularly so for those areas which provide ancillary services to hospitals but do not themselves provide sleeping accommodation. Therefore all departments or areas, including any departments or areas providing ancillary services, planned as an integral part of a hospital should be designated as Purpose Group Institutional.

4.8 An exception arises where a department or area, if built as a separate building, would be subject to more stringent structural fire precautions than those applicable to Purpose Group Institutional. Where such departments or areas are built as an integral part of a hospital their construction should comply with the additional Approved Document B2/3/4 structural fire precautions relevant to that Purpose Group.

4.9 Any new health building which does not form part of an integral whole hospital and does not contain patient sleeping accommodation or departments to which patients have access and is designed and built as a completely separate building will have its Purpose Group determined by its intended use. However, the separate building can still be considered as separate if it is only linked to a hospital complex by means of a circulation space (ie a linking corridor) provided that:

a. the linking corridor contains no accommodation either within it or off it (except the accommodation it serves at each end);

b. the linking corridor is compartmented at each end by fire resisting construction and fire resisting doors to the same fire resisting construction as the building in which it occurs;

c. the re-entrant angles between the linking corridor and each building are designed in accordance with the recommendations in paragraphs 11.12 and 11.17 to 11.20 inclusive;

d. the linking corridor, if single storey, gives direct access within the linking corridor, to a final exit at ground level or, if multi-storey, to an escape stairway;

e. the separation of the two buildings, ignoring the linking corridor, complies with paragraph 4.10.

Neither the non-hospital building nor the linking corridor should be designed for or used for Progressive Horizontal Evacuation of patients. If the non-hospital building is to be

used for Progressive Horizontal Evacuation then it should be re-designated as a Purpose Group Institutional building and the recommendations for structural fire precautions and means of escape contained in this HTM should be applied.

Separation of buildings

4.10 In order to minimise the risk of fire spreading from one building to another building, Approved Document B2/3/4 gives guidance on the distance of separation between:

a. the relevant boundary and any new building of any Purpose Group;

b. certain Purpose Groups when two or more buildings are on the same site and when one of the buildings (new or existing) is of residential or assembly use. It should be particularly noted that a Table (headed 'Designation of Purpose Groups') within Approved Document B2/3/4 defines residential as including institutional along with dwelling houses, flats/maisonettes and other residential.

4.11 The guidance in Approved Document B2/3/4 concerning the separation between buildings on the same site should also be applied to certain courtyards, lightwells and elevations of the same building (see paragraph 11.21).

4.12 It should be noted that access for fire fighting appliances may require greater separation between buildings than is indicated in Approved Document B2/3/4 (see Appendix 5 of this HTM).

5 Consultation

Client/Architect/Engineers Consultation

5.1 During the design stage it is essential that the architect/engineers closely liaise with the client in drawing up a fire strategy including a fire evacuation plan for the new hospital, hospital extension or major alteration. Careful consideration should be given to means of escape from all parts of the building and especially those areas where the client can foresee difficulties due to the patients' physical or mental condition or where medical treatment renders the patients particularly immobile. If the new building is an extension to an existing hospital the question of shared escape between the two buildings may arise and again will require careful consideration.

Local Fire Authority/Architect/Engineers Consultation

5.2 Since this HTM cannot cover all situations that might occur in the design of a new hospital project it is essential that local fire authorities are consulted from inception to completion of a project.

5.3 Any subsequent alteration to the agreed design, structural fire precautions, engineering services and means of escape provision, whether during design or construction stages, should maintain the recommendations of this HTM or should be agreed with the local fire authority.

5.4 The architect will need to make an early approach to the local fire authority to agree fire brigade access into and within the site and into and within the new hospital and discuss water supply, fire extinguishing equipment, wet and dry risers, if required, and other matters concerning the fire fighting services.

Client/Staff Briefing

5.5 It is essential that staff in hospitals designed in accordance with this HTM, and any variations agreed with the local fire authority, are aware of the principles of Progressive Horizontal Evacuation (Chapter 7) and Alternative Means of Escape (Chapter 17) and how these principles and other recommendations have been incorporated into the hospital. Without this knowledge there is the possibility that the fire safety provision may be abused and/or rendered ineffective in the event of fire, especially if patient evacuation becomes necessary.

Health & Safety Executive

5.6 See paragraphs 3.4 and 11.43 for consultation with the Health & Safety Executive.

6 Fire risk separation

General

6.1 Hospitals contain patients many of whom are non-ambulant or who would require assistance when escaping from a fire. This HTM has taken these facts into account when setting down the recommendations for structural fire precautions and means of escape but it is considered that additional requirements are necessary to isolate or separate patient areas from areas of high fire risk and areas of high fire load.

6.2 High life risk areas should not be located immediately above high fire risk/load areas. There are some areas, such as the main kitchen and pharmacy, which, for functional reasons, may have to be sited close to high life risk areas. In such a situation additional precautions should be taken to isolate the high fire risk/load area by fire resisting construction. If the high fire risk/load area is below a high life risk area and adjacent to external walls it should not contain openings in the external walls other than fire resisting doors for person access only. It is not possible in this HTM to give precise recommendations for separation of life risk areas from fire risk/fire load areas since the degree of risk in both categories can vary from high to low. The designer should make a proper assessment of the degree of risk to which patients and staff may be exposed if an adjacent fire risk/fire load area caught fire and depending on this assessment ensure that the design solution is commensurate with the degree of risk. This may, in certain instances, require additional fire resisting construction and/or the installation of mechanical devices such as sprinklers. It is recognised that certain sites create particular difficulties in achieving the proper degree of separation due to congestion from other buildings on the site or limited ground area. However, the provision of such additional features should not be taken as a license to ignore the basic recommendation to properly separate life risk areas from high fire risk/high fire load areas in every instance where this can be achieved.

Life and fire risk/load areas

6.3 The various parts of any hospital may be categorised in the following way according to their life risk and fire risk characteristics:

Low life risk areas

6.4 Areas in which all occupants are ambulant and able to move unaided away from a fire, or undivided areas in which not more than 50 ambulant persons normally congregate.

High life risk areas

6.5 Areas in which occupants may reside and are not all able to move unaided away from a fire, or undivided areas in which more than 50 persons normally congregate.

High fire risk areas

6.6 Areas which due to their function and/or content are more than usually susceptible to an outbreak of fire or rapid spread of smoke or fire.

High fire load areas

6.7 Those rooms or areas of hospitals which contain large amounts of combustible materials and thereby constitute a fire load in excess of that normally found within parts of such hospitals.

6.8 Appendix 3 lists the various hospital departments and health buildings together with their risk category.

7 Progressive horizontal evacuation

7.1 Progressive Horizontal Evacuation and Alternative Means of Escape are two of the most important principles upon which the recommendations contained in this HTM are based.

7.2 Alternative Means of Escape will affect the design of all new hospitals but will not necessarily affect the structural fire precautions and is therefore dealt with in Chapter 17 — Means of Escape.

7.3 Progressive Horizontal Evacuation however will affect the structural fire precautions since the recommendations will require structural precautions additional to those contained in Approved Document B2/3/4.

7.4 In those buildings in which the occupants are able bodied, means of escape, in the event of fire, is normally effected by persons moving horizontally through circulation spaces to the nearest fire escape stairway then vertically either to an assembly point elsewhere in the building or to the open air.

7.5 In hospitals, particularly in patient areas, the immediate and total evacuation of the hospital in the event of fire may be neither desirable nor necessary. Some handicapped patients, patients who use wheelchairs and bedbound patients cannot negotiate escape routes, particularly stairways, unaided. Patients under medication may require staff assistance and patients who are dependent upon electrical/mechanical apparatus for their survival cannot always be disconnected and moved rapidly down stairways without possible fatal consequences. Patient accommodation and departments to which non-ambulant and/or partially ambulant patients have access should not be located on storeys where evacuation in a fire emergency would necessitate travelling up a stairway to reach a final exit. The illustrations on page 11 show a range of techniques used in assisting patients to escape in the case of fire. They serve as a reminder of the severe difficulties encountered and underline the need to emphasise the basic principles of horizontal movement to a place of safety.

7.6 The need for total evacuation of a hospital in the event of fire depends on a number of criteria such as the size of the fire, the rate of its spread etc. In a large modern hospital complex incorporating numerous measures of safety against fire, such as structural fire precautions, detection of smoke and fire, staff training etc, a place of safety may be reached within the hospital, at least initially, by moving the occupants away from the source of the fire into adjoining safe areas. The open air, clear of the effects of fire, must be regarded as the 'ultimate' place of safety.

7.7 Staff in hospitals are on duty day and night for the care and supervision of patients and they are trained to assist patients in evacuation in case of fire. Despite this provision, to evacuate the entire hospital in the event of fire could be an enormous exercise in which patients might suffer.

7.8 For the above reasons Progressive Horizontal Evacuation of patients is considered essential in hospitals.

7.9 The principle of Progressive Horizontal Evacuation is that in the event of a fire in one area, necessitating evacuation of the patients from that area, the patients are evacuated, in the first instance, to an adjoining area, or areas, on the same level designed to protect its occupants from the immediate dangers of fire and smoke. The patients from the evacuated area may remain there until the fire is dealt with. If the fire danger increases and further movement of patients, away from the area on fire, becomes necessary, then, depending upon the physical condition of the patients they can either be evacuated down the nearest available stairway or bed escape lift or moved to other areas on the same level remote from the area on fire where they can remain until the fire is dealt with or, if necessary, be evacuated down available stairways or bed escape lift. This procedure will give sufficient time for non-ambulant and partially ambulant patients to be assisted down stairways to a place of safety should it become necessary to evacuate an entire storey.

7.10 Structural fire precaution design to meet the requirements of Progressive Horizontal Evacuation is contained in Chapters 8 and 9 — Compartments and Sub-compartments.

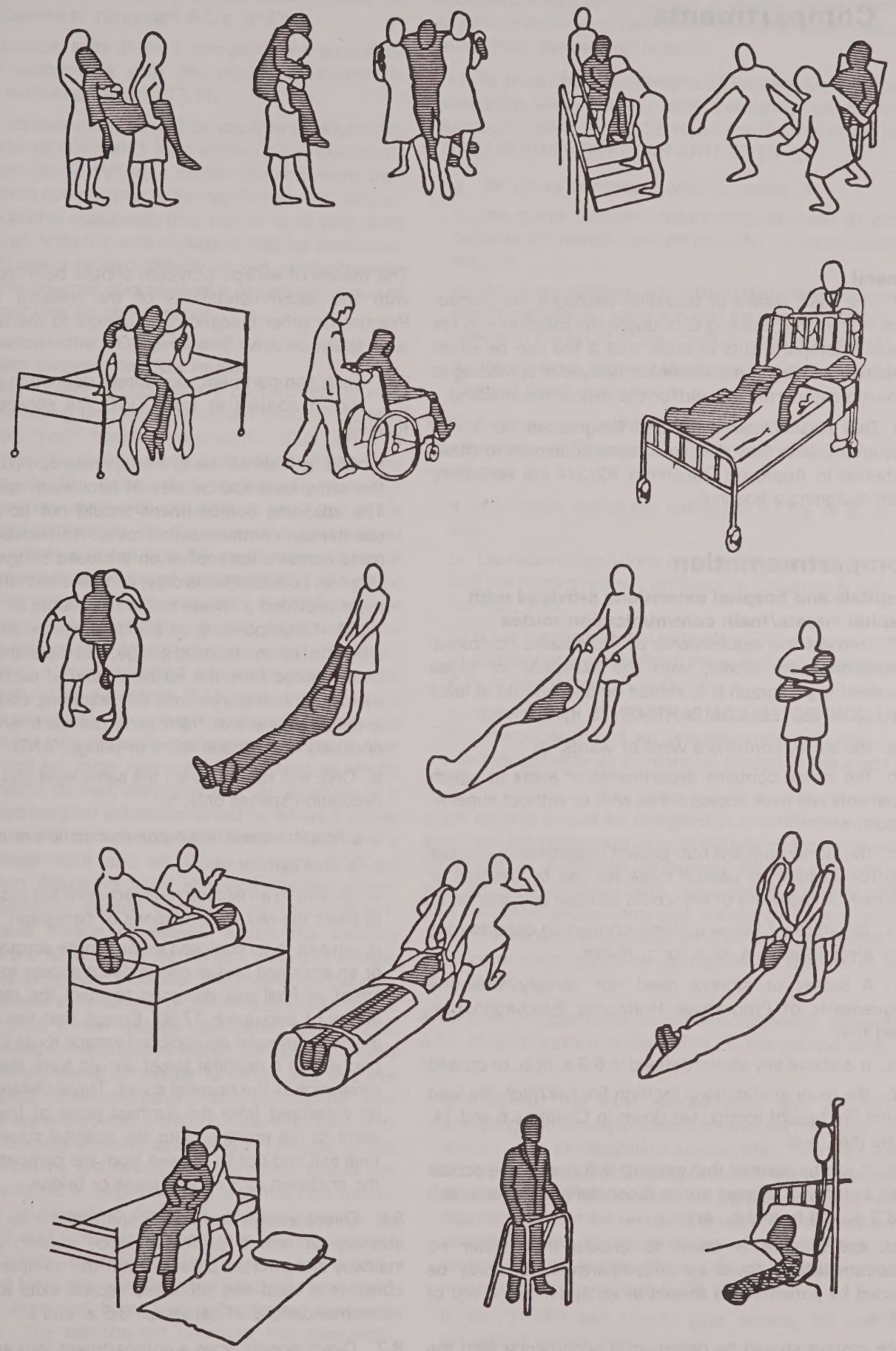

8 Compartments

General

8.1 The basic means of providing structural fire precautions in any large building is to divide the building into fire resisting compartments in order that a fire can be either contained within a compartment or delayed in spreading to adjoining compartments and/or the rest of the building.

8.2 Due to the requirements of Progressive Horizontal Evacuation, structural fire precautions additional to those contained in Approved Document B2/3/4 are necessary when designing a hospital.

Compartmentation

Hospitals and hospital extensions provided with hospital streets/main communication routes

8.3 To meet the requirements of Progressive Horizontal Evacuation every storey, with the exception of those described in paragraph 8.4, should be divided into at least TWO CONNECTED COMPARTMENTS if,

a. the storey contains a ward or wards, or

b. the storey contains departments or areas to which patients will have access either with or without supervision, or

c. the storey contains non-patient departments or areas which include an escape route for use by patients or which, in the event of fire, could be used by patients, or

d. the storey is below a storey containing departments or areas listed in a. or b. or c. above.

8.4 A storey or storeys need not comply with the requirements of Progressive Horizontal Evacuation provided that:

a. it is above any storey defined in 8.3 a. or b. or c., and

b. the recommendations for high fire risk/high fire load and fire hazard rooms, set down in Chapters 6 and 14, are met, and

c. it can be assured that patients will never have access to a storey or storeys above those defined in paragraph 8.3 a. and b. and c., and

d. special care is taken to ensure that under no circumstances could an uncompartmented storey be used by patients as a means of escape in the event of fire.

Such storeys should be designed in accordance with the structural fire precaution recommendations for Institutions contained in approved Document B2/3/4 and, where relevant, in accordance with paragraph 4.8 of this HTM. The means of escape provision should be in accordance with the recommendations of the relevant Codes of Practice or other guidance appropriate to the use of any such storey.

8.5 Each compartment, on storeys defined in paragraph 8.3, should contain at least TWO fire escape exits as follows:

a. ONE exit should be to an adjoining compartment on the same level and by way of circulation spaces only. The adjoining compartment should not be a hospital street/main communication route. An enclosed escape route across a flat roof or an enclosed bridge, connecting two compartments only, complies with this requirement provided it meets the requirements of paragraph 17.60. If incorporating an enclosed escape route across a flat roof or an enclosed bridge, travel distances should be measured from the furthest point of each compartment to the entrance into the adjoining compartment and not to the exit from each compartment into the enclosed roof escape route or bridge, AND

b. ONE exit should be on the same level and by way of circulation spaces only, to:

i. a hospital street/main communication route, or

ii. a final exit, or

iii. an exit to an escape route across a flat roof designed to meet the recommendations of paragraph 17.56, or

iv. an exit to an enclosed escape route across a flat roof or an enclosed bridge giving direct access to a hospital street or final exit designed to meet the recommendations of paragraph 17.60. Except that the doors and any wall between an enclosed escape route or enclosed bridge and a hospital street should have the same fire resistance as the hospital street. Travel distances should be measured from the furthest point of the compartment to the entrance into the hospital street or to the final exit and not to the exit from the compartment into the enclosed roof escape route or bridge.

8.6 Direct access from a compartment into an escape stairway or into a protected lobby serving an escape stairway is permitted provided that the compartment also contains at least two other fire escape exits to meet the recommendations of paragraph 8.5 a. and b.

8.7 Direct access from a compartment into an enclosed escape route across a flat roof giving access to an escape stairway, to meet the recommendations of paragraph 17.59, is permitted provided that the compartment also

contains at least two other fire escape exits to meet the recommendations of paragraph 8.5 a. and b.

8.8 Fire escape exits from a compartment should be located in accordance with the recommendations for alternative exits in paragraph 17.14.

8.9 Each compartment should be capable of accommodating additional occupants from adjoining compartments in a fire emergency. Where a storey contains more than two connected compartments the requirements to accommodate additional occupants may not be so critical since the occupants from the area of hazard may be accommodated in any one or more of the connected compartments. However, the designer should always ensure adequacy of available floor area for this purpose.

Hospital extensions NOT provided with hospital streets/main communication routes

8.10 Hospital streets should always be provided in new hospitals, including first and subsequent phases of a new hospital, and major hospital extensions. Although it is recognised that the provision of a hospital street gives the best option for fire safety it is appreciated that this provision may not always be practical in small and some medium sized extensions. In the case of medium sized extensions, where it is not possible to provide a hospital street, the recommendations of paragraph 8.11 should be observed. It is not possible to accurately define a medium sized extension, or for that matter a small extension, since capital cost and/or area are not reliable guides. However, an example of a medium sized extension, meeting the recommendations of paragraph 8.11, would be where a storey contains three or more wards which can be compartmented into separate management units so that each ward, and any other non-ward department, is wholly contained within its own compartment. An example of a small attached hospital extension would be where a storey contains no more than two wards or one ward and a non-ward department and no storey exceeds 1,500 sq metres. When designing small attached hospital extensions consideration should be given to the compartmentation and means of escape within the existing hospital and the suitability of its use as a means of escape from the new extension. However, depending on the plan shape of the new extension and how it is attached to the existing hospital, a new escape stairway(s) and/or final exit(s) may need to be provided within the new extension as an alternative means of escape to the escape into the existing hospital. This could be critical if, for example, two escape exits were provided from the new extension into the existing hospital without separating the escape routes from each other by fire resisting construction within the existing hospital. It is recommended that the new extension should be separated from the existing hospital by compartment wall construction and that any storey containing two wards, or one ward and a non-ward department, should have the wards, or the ward and non-ward department, separated by at least sub-compartment wall construction. The options set down in this paragraph concerning the design of new hospital extensions do not negate all other recommendations contained in this HTM. The recommendations of this paragraph are for the extensions which on any storey or storeys contain patient accommodation or patient departments or patient escape routes from the existing hospital.

8.11 To meet the requirements of Progressive Horizontal Evacuation every storey, with the exception of those described in paragraph 8.12, should be divided into at least THREE CONNECTED COMPARTMENTS if,

a. the storey contains a ward or wards, or

b. the storey contains departments or areas to which patients will have access either with or without supervision, or

c. the storey contains non-patient departments or areas which include an escape route for use by patients or which, in the event of fire, could be used by patients, or

d. the storey is below a storey containing departments or areas listed in a. or b. or c. above.

8.12 A storey or storeys need not comply with the requirements of Progressive Horizontal Evacuation provided that:

a. it is above any storey defined in 8.11 a. or b. or c., and

b. the recommendations for high fire risk/high fire load and fire hazard rooms, set down in Chapters 6 and 14, are met, and

c. it can be assured that patients will never have access to a storey or storeys above those defined in paragraph 8.11 a. and b. and c., and

d. special care is taken to ensure that under no circumstances could an uncompartmented storey be used by patients as a means of escape in the event of fire.

Such storeys should be designed in accordance with the structural fire precaution recommendations for Institutions contained in Approved Document B2/3/4 and, where relevant, in accordance with paragraph 4.8 of this HTM. The means of escape provision should be in accordance with the recommendations of the relevant Codes of Practice or other guidance appropriate to the use of any such storey.

8.13 Each compartment, on storeys defined in paragraph 8.11, should contain at least THREE fire escape exits as follows:

a. TWO of the exits should each give access to adjoining and separate compartments on the same level and by way of circulation spaces only. The two exits should be located in accordance with the recommendations for alternative exits in paragraph 17.14 (this recommendation for two exits to adjoining and separate compartments will require at least three compartments on every storey, except storeys which meet the recommendations of paragraph 8.12), AND

b. the THIRD exit should give access, by way of circulation spaces only, to:

i. a fire escape stairway, or

ii. a final exit on the same level, or

iii. an escape route across a flat roof on the same level, designed in accordance with paragraph 17.56, or

iv. an exit to an enclosed escape route across a flat roof or an enclosed bridge on the same level, giving direct access to a hospital street or final exit designed to meet the recommendations of paragraph 17.60. Except that the doors and any wall between an enclosed escape route or enclosed bridge and a hospital street should have the same fire resistance as the hospital street. Travel distances should be measured from the furthest point of the compartment to the entrance into the hospital street or to the final exit and not to the exit from the compartment into the enclosed roof escape route or bridge.

8.14 The exit recommended in paragraph 8.13 b. should not be shared by any other compartment. The recommendation for the fire escape exit in paragraph 8.13 b. is to ensure that occupants cannot be trapped in a compartment, without means of escape or rescue, if the adjacent compartments are unusable due to fire and/or smoke logging.

8.15 Each compartment should be capable of accommodating additional occupants from adjoining compartments in a fire emergency.

Structural requirements

8.16 Compartment walls should be constructed in accordance with the practical guidance contained in Approved Document B2/3/4. It is recommended, however, that compartment walls should be constructed in solid masonry.

8.17 Doors in compartment walls should be located only across circulation spaces and not between rooms on either side of a compartment wall, except if adopting the recommendation in paragraphs 8.20 to 8.23.

8.18 Special consideration should be given to structural expansion joints to ensure that the expansion joint material does not fall out, burn out, liquify or vapourise in the event of fire thus allowing the passage of fire, smoke and toxic gases into vertically or horizontally adjacent compartments.

Additional requirements for certain departments

8.19 Operating departments, Coronary Care Units, Intensive Therapy Units and Neo Natal Units etc, should be separated from all other departments or areas by at least one hour fire resisting construction designed to meet the guidance for compartment walls contained in Approved Document B2/3/4. The maximum number of patients accommodated should not exceed 20 or in the case of operating departments 30. Alternative means of escape should be provided.

Wards

8.20 In wards only, a relaxation of the compartment means of escape, as recommended by paragraphs 8.5 a., and 8.13 a. is permitted, provided that the means of escape complies with paragraphs 8.21 or 8.22 and in either instance meets all the requirements of paragraph 8.23.

8.21 In wards which adjoin each other on either side of a compartment (or sub-compartment) wall it is permitted to provide the means of escape, recommended by paragraph 8.5 a. or one only of the exits recommended by paragraph 8.13 a., by passing from a circulation space in one compartment (or sub-compartment) through one ward bedroom only, through the compartment (or sub-compartment) wall, through one ward bedroom only in the adjoining compartment (or sub-compartment) and into a circulation space in the adjoining compartment (or sub-compartment), provided that all the requirements of paragraph 8.23 are met.

8.22 In wards which are separated by a compartment (or sub-compartment) wall from a non-ward department it is acceptable to provide the means of escape, required by paragraph 8.5 a. or one only of the exits required by paragraph 8.13 a. by passing from a circulation space in the ward, through one ward bedroom, through the compartment (or sub-compartment) wall and DIRECTLY into a circulation space in the adjoining non-ward department provided that all the requirements of paragraph 8.23 are met. In this instance the means of escape exit from the ward compartment (sub-compartment) into the non-ward compartment (sub-compartment) is NOT acceptable as a compartment exit from the non-ward compartment recommended in paragraphs 8.5 a. and 8.13 a. This is to ensure that in the event of fire precluding the use of the exit to the hospital street or final exit or an exit to an escape route across a flat roof (paragraph 8.5 b.) or the alternative compartment exit (paragraph 8.13 a.) the occupants of the non-ward compartment do not necessarily have to escape through a ward bedroom.

8.23 In providing the means of escape set down in paragraphs 8.21 or 8.22 all the following recommendations should be met:

a. The wards on either side of the compartment (or sub-compartment) wall (paragraph 8.21) or on one side of the compartment (or sub-compartment) wall only (paragraph 8.22) should be under staff supervision twenty four hours a day every day. All nursing staff on duty in these particular wards should be made aware of the special means of escape provision.

b. The bedroom entry door and the door in the compartment (or sub-compartment) wall should be opposite each other and the escape route between the bedroom door and the door in the compartment (or sub-compartment) wall should be kept free from obstruction at all times. This recommendation does not preclude the daily use of items and equipment necessary for patient care but such items and equipment should not be left on the escape route when unattended by staff.

c. The bedroom doors and the door in the compartment (or sub-compartment) wall should be available for use at all times and should never be locked.

d. The door into the bedrooms should be provided with fire exit signs on both faces of the door.

e. The door in the compartment (or sub-compartment) wall should be provided with fire exit signs on both faces of the door, except on the non-ward department face of the door referred to in paragraph 8.22.

Compartment/department 'relationship'

8.24 The provision of compartments should not be looked upon only in terms of structural fire precautions. The User responsibilities such as the extent of the area under their control, including day to day management, fire drill, the management of evacuation of the area of fire etc, will have a real impact on the design, integrity, size and configuration of compartments. For these reasons it is strongly recommended that the design of a compartment should recognise and integrate the management requirements and health service arrangements by making the compartment conterminous with the department.

Travel distances — compartment

8.25

a. **Hospitals and hospital extensions with hospital streets/main communication routes**

The travel distance from any point within a compartment (except hospital street/main communication route compartments) should not exceed 64 metres:

i. to an adjoining compartment AND

ii. to a hospital street or final exit or an exit to an escape route across a flat roof in accordance with paragraph 17.56.

b. **Hospital extensions NOT provided with hospital streets/main communication routes**

The travel distance from any point within a compartment should not exceed 64 metres:

i. to each of the two exits to adjacent and separate compartments AND

ii. to the stairway exit or final exit or an exit to an escape route across a flat roof in accordance with paragraph 17.56.

Of this 64 metres the travel in a single direction of escape should not exceed 15 metres. (See paragraphs 17.17 and 17.18 for special precautions for single direction of escape).

Small detached hospital extensions

8.26 In small detached hospital extensions the application of the recommendations contained in paragraph 8.5 b. is extended to include the provision of a stairway as one of the two escape exits required from every compartment provided that the recommendations contained in this paragraph and paragraphs 8.27 and 8.28 are met as follows:

a. No patient accommodation or areas or departments to which patients will or may have access should be located above second floor level.

b. The area of any storey should not exceed 1000 square metres. NB When calculating the area of any storey the area must include the total accommodation ie patient, staff, visitor areas, circulation spaces and communication routes. For example, the storey area of separate pavilion type buildings connected only by communication routes must be calculated to include each pavilion and the communication routes and only if this total area is 1000 sq metres or less is this recommendation acceptable.

c. Each storey containing patient accommodation or areas or departments to which patients will or may have access and each storey below a storey containing patient accommodation or areas or departments to which patients will or may have access should be divided into at least TWO compartments. A compartment containing ONLY a ward or part of a ward or ONLY any other department or unit need not be sub-compartmented. A compartment containing a ward or part of a ward and any other department or unit should be sub-compartmented to separate the ward from the other department or unit.

d. No storey containing a ward or wards should contain more than 30 patients.

e. No compartment containing a ward or wards or part of a ward should contain more than 20 patients.

f. At least two fire escape exits should be provided from each compartment as follows:

i. One exit should be to an adjoining compartment on the same level, AND

ii. One exit should be to:

a. an escape stairway, or

b. a hospital street on the same level, or

c. a final exit on the same level, or

d. an escape route across a flat roof on the same level which meets the recommendations of paragraph 17.56.

8.27 The recommendation in paragraph 8.26 is to permit the provision of small detached hospital units without the necessity to provide a hospital street or three compartments on every storey accommodating patients or on storeys to which patients have access. If the unit is connected in any way to the main hospital, except by a linking corridor at ground level only which is provided with final exits, the recommendations of paragraph 8.26 do not apply.

8.28 The travel distance from any point within a compartment to an escape stairway (or protected lobby to an escape stairway) provided in accordance with paragraph 8.26 f.ii.a. should not exceed 64 metres.

8.29 The adoption of this recommendation in the design of small detached hospital extensions does not negate all other recommendations contained in this HTM.

9 Sub-compartments

General

9.1 The maximum size of a compartment permitted by Approved Document B2/3/4 for Institutional buildings although appropriate for fire containment is nevertheless considered to be too large an area if the compartment contains patient accommodation and/or areas to which patients will have access. In the event of fire a large number of patients could be overcome by the rapid spread of fire, smoke and toxic gases. It is therefore recommended that compartments containing patient accommodation or areas to which patients will or may have access should be divided into smaller fire and smoke tight cells (sub-compartments) and that such sub-compartments should comply with the recommendations for Progressive Horizontal Evacuation.

Sub-compartmentation

9.2 Each compartment on every storey should be divided into at least TWO CONNECTED SUB-COMPARTMENTS if:

a. it contains a ward or wards and a non-ward department or departments (see paragraph 9.3), or

b. it contains a ward or wards with a total of more than 30 patients, or

c. it contains a ward or wards in excess of 750 sq metres, or

d. it contains departments or areas to which more than 30 patients will have access at the same time either with or without supervision (see paragraph 9.13 for exception), or

e. it contains non-patient departments or areas which include an escape route for use by patients in the event of fire (see paragraph 17.8) and exceeds 750 sq metres, or

f. it is below a storey containing departments or areas listed in a., b., c., d. or e. above and exceeds 750 sq metres.

9.3 Where sub-compartmentation is required to satisfy paragraph 9.2a. it should separate the ward or wards from the non-ward department or departments.

9.4 No sub-compartment should accommodate more than 30 patients (see paragraphs 8.26 and 9.13 for exceptions).

9.5 Each sub-compartment should be designed to meet the following requirements:

a. The floor area should not exceed 750 square metres.

b. At least TWO exits should be provided to adjoining areas on the same level, by way of circulation spaces only, and the two exits should be located to comply with the requirements of alternative exits and Progressive Horizontal Evacuation.

c. ONE exit should be to an adjoining sub-compartment *and*

d. the OTHER exit should be to an adjoining sub-compartment which is separated by fire resisting construction from the sub-compartment in c. above, or

i. an adjoining compartment, or

ii. a hospital street, or

iii. a final exit, or

iv. an exit to an escape route across a flat roof to comply with paragraph 17.56, or

v. an exit to an enclosed escape route across a flat roof or an enclosed bridge giving direct access to:

a. a hospital street

b. a final exit

to meet the requirements of paragraph 17.60. Except that the doors between an enclosed escape route and a hospital street should have the same fire resistance as that required for the building. In this instance travel distances should be measured to the entrance into the hospital street or to the final exit and not to the exit from the sub-compartment into the enclosed roof escape route or bridge.

9.6 The solution illustrated at diagram A below is unacceptable and must be avoided.

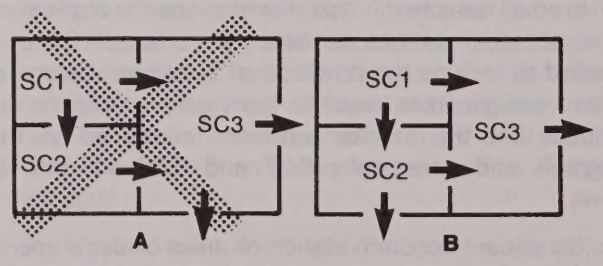

SC – Sub-compartment

Example of unacceptable solution since fire in sub-compartment 3 would block exit from SC1 and SC2.

Example of acceptable solution since fire in any one sub-compartment would not block safe exit from the others.

Structural requirements

9.7 The walls and openings enclosing the sub-compartment should be constructed to a fire resisting

standard of not less than half an hour or not less than half the period required for the compartment walls, whichever is the greater.

9.8 Sub-compartment walls should be constructed to the required fire resistance for stability, integrity and insulation when tested in accordance with BS476: Part 8. The inclusion of engineering terminals in one or both faces of cavity construction sub-compartment walls could vitiate the fire and smoke integrity of the wall. The inclusion of engineering terminals in a sub-compartment wall requires careful design detailing and site installation. It is essential to ensure that the engineering terminal boxes are properly fixed and include permanent fire stopping between each box and the wall face in which it occurs. Pipes within the cavity should be in metal, not less that 0.7mm thick, and mechanically fixed, welded or brazed to the box. Cables should be contained in metal conduit, not less than 0.7 mm thick, and mechanically fixed to the box. There should be no openings between an engineering terminal box and wall cavity. Any ventilation ducts within the cavity should be constructed of metal not less than 0.7mm thick. Account should be taken of the possibility of damage to cavity construction sub-compartment walls by hospital vehicles.

9.9 In the case of hospitals with pitched roofs, half-hour fire-resisting sub-compartment walls may be terminated at ceiling level on the storey immediately below the pitched roof only, provided that:

a. the ceiling is of a type which, when tested in accordance with BS476: Part 8 by exposure of the underside to fire, achieves 30 minutes stability, 30 minutes integrity and 30 minutes insulation, and

b. the half hour fire resisting ceiling extends throughout the compartment, and

c. any duct perforating the half hour fire resisting ceiling is fitted with an automatic steel fire shutter on a fusible link at ceiling level irrespective of the thickness of the mild steel duct casing (see paragraph 22.8), and

d. all conduits, pipes and services perforating the ceiling are fire stopped, and

e. all recessed fittings in the ceiling, such as luminaires, are located in ceiling recesses which maintain the half hour fire resistance of the ceiling.

9.10 The provision of a half hour fire resisting ceiling under a pitched roof does not preclude the guidance in Approved Document B2/3/4 for cavity barriers in the roof space.

9.11 It is essential to ensure that fire from below does not bypass the fire resisting ceiling and enter the roof space above. In traditional roof construction overhanging and unprotected eaves could lead to a breach of integrity if fire broke through the windows, especially on the storey immediately below the pitched roof. These eaves soffits and fascias should provide half an hour fire resistance between the outside and inside of the eaves construction when the recommendation in paragraph 9.9 is adopted.

9.12 Since one of the purposes of sub-compartmentation is to contain smoke from spreading to adjoining areas it is essential that the walls are designed to maintain their integrity against smoke penetration. The recommendation therefore is that sub-compartment walls should not contain openings, other than fire resisting doors across circulation spaces, except as referred to in paragraphs 8.20 to 8.23 and openings for engineering services which meet the recommendations of Chapter 22.

9.13 In those departments where large numbers of patients gather in one area such as OPD, Rehabilitation, Day Hospital, Patient Dining Room, the division of such areas into sub-compartments to contain no more than 30 patients could cause considerable inconvenience (eg OPD) or be impractical (eg Rehabilitation Gymnasium). It is therefore recommended that in such areas in which more than 30 patients may be gathered at any one time additional fire escape exits should be provided as follows:

- up to 30 patients — minimum of 2 fire escape exits.
- 31 to 80 patients — minimum of 3 fire escape exits.
- 81 to 130 patients — minimum of 4 fire escape exits etc.

However the maximum sub-compartment area of 750 sq metres should not be exceeded. See paragraph 17.75 for additional exit requirements in assembly rooms.

9.14 Many hospitals now adopt an appointment system for their OPD which if implemented properly should reduce the number of patients assembled at any one time and therefore reduce the number of sub-compartments or additional escape exits required. But the designer should exercise caution in this respect since some hospitals purport to have an appointment system but in reality arrange for all the patients attending the various clinics to arrive at the same time. It should also be noted that the number of patients assembled may often exceed the theoretical number because of late running of clinics and early arrival of some patients and provision should always be made for this situation.

Sub-compartment/department relationships

9.15 As with the compartment it is strongly recommended that the extent of a sub-compartment should be conterminous with its management arrangements.

Travel distances — sub-compartment

9.16 The travel distance from any point within a sub-compartment (except sub-divisions within a hospital street/ main communication route) should not exceed 32 metres to:

a. an adjoining compartment, or

b. an adjoining sub-compartment, or

c. a hospital street, or

d. a final exit, or

e. an exit to an escape route across a flat roof to comply with paragraph 17.56.

Of the above travel distances the travel in a single direction should not exceed 15 metres (see paragraphs 17.17 and 17.18 for Special Precautions for Single Direction of Escape).

10 Fire-resisting construction other than compartments and sub-compartments

General

10.1 Chapters 12, 13, 14, 15, 16, 18, 19 and 20 contain recommendations for fire resisting construction other than for compartments and sub-compartments. While every effort has been made to include types of accommodation and areas which require enclosing in fire resisting construction it is not possible to include for every design eventuality, user requirement, or future technological advance all of which could result in rooms or areas which constitute a fire hazard. It is therefore essential that the designers ensure that any accommodation which in their opinion constitutes or could constitute a high fire risk and/or high fire load is enclosed in fire resisting construction.

One hour or more fire resisting construction

10.2 Walls in a hospital requiring one hour or more fire resistance should be of solid masonry construction except as in paragraph 10.6.

10.3 Small chases for mechanical and electrical services are acceptable provided that the required fire resistance of the wall is maintained.

10.4 Apart from the above two recommendations all walls of one hour or more fire resistance should be in accordance with the guidance for compartment walls in Approved Document B2/3/4.

10.5 Fire resisting doorsets should be to the same standard of fire resistance as the wall in which they occur (except for certain protected lobbies — see paragraph 18.30).

10.6 Glazing should not be located in one hour or more fire resisting construction unless it meets the required fire resistance for stability, integrity and insulation.

Half hour fire resisting construction

10.7 All walls requiring half hour fire resistance should be carried up to the structural soffit or rigid roof construction and fire stopped. Alternatively half hour fire resisting construction may be terminated at ceiling level provided that the ceiling is a half hour fire resisting ceiling which conforms with the requirements of paragraphs 14.3 a., b., c., d. and e., or paragraph 13.2a. in relation to non-acute geriatric and non-acute mental illness ward bedrooms only.

10.8 Doorsets should be 30 minute fire resisting and fitted with automatic self closing devices, except in accordance with paragraph 13.2b.

10.9 All other openings should be protected to half hour fire resisting standard.

10.10 Glazed screens and panels should meet the following recommendations:

a. glazing should be fire resisting and all glazed panels and screens should be constructed to give half hour fire resistance when tested in accordance with BS476: Part 8 in respect of stability and integrity only. Care should be taken to ensure that glazed screens will not constitute a heat radiation hazard, in the event of fire, when positioned adjacent to circulation spaces.

b. glazing should not be provided between single direction of escape circulation spaces and adjacent rooms if any room is provided for:

i. patient accommodation

ii. patient use

iii. staff and/or visitors sleeping accommodation. (See paragraphs 17.17 and 17.18).

c. glazed screens should not be provided in walls enclosing fire hazard rooms except in accordance with paragraph 14.7.

d. timber frames should be protected with intumescent or other coatings that prevent surface ignition by radiation through the glazing.

11 Additional structural/constructional aspects

Height limitation

General

11.1 Approved Document B2/3/4 allows hospitals to be constructed to unlimited height and volume.

11.2 Although restricted by structural fire safety precautions the natural spread of fire and smoke within a building can be very rapid and serious.

11.3 There is also the risk of fire spreading outside a building from floor to floor via the windows.

11.4 Due to these circumstances, any high rise building poses a problem for evacuation of the occupants but in high rise hospitals the problems of evacuation are more serious. It has been calculated that the total evacuation of 500 patients from a two storey hospital could take over 1½ hours and over 3½ hours in an 11 storey hospital. Since most of the occupants will need assistance in being evacuated from the building the physical strain on rescuers due to repeated vertical travel will result in decreasing performance.

High rise hospitals

11.5 High rise hospitals are usually the result of a restricted site and due to this have relatively small storey areas.

11.6 For Progressive Horizontal Evacuation to be fully effective each storey of any hospital needs to be sufficiently large to contain the number of compartments and sub-compartments necessary for patient safety and patient evacuation in the event of fire. As stated in paragraph 11.4 the problems of patient evacuation in a high rise hospital, in which patients are accommodated on upper storeys, are considerable.

11.7 DHSS does not recommend accommodating patients on storeys where the travel distance up the stairway exceeds 45 metres from final exit level. If such a solution is unavoidable the designer should satisfy himself, in association with DHSS or Welsh Office, as appropriate, and the local fire authority, whether or not additional protection is necessary (see paragraphs 11.9 and 11.10). It is STRONGLY RECOMMENDED that designs of all new hospitals, new hospital extensions and major alterations are submitted to DHSS or Welsh Office, as appropriate, in all cases where it is intended to accommodate patients and/or provide departments to which patients will have access on storeys above 45 metres, measured in accordance with paragraph 11.8. It is also STRONGLY RECOMMENDED that designs of new hospital extensions should be submitted to DHSS or Welsh Office, as appropriate, if the extension is linked to or built against an existing hospital and the existing hospital accommodates patients and/or provides departments to which patients have access on storeys above 45 metres measured in accordance with paragraph 11.8. Any submissions should include room plans of each storey and indicate:

a. fire risk separation
b. compartmentation
c. sub-compartmentation
d. fire hazard rooms
e. single direction of escape circulation spaces
f. hospital streets (if provided)
g. fire escape bed lifts (if provided)
h. protected shafts
i. escape routes.

Plans should preferably be to a scale of not more than 1:100 or less than 1:200. All fire resisting wall construction should be indicated in different colours appropriate to their period of fire resistance.

11.8 The travel distance within the stairway enclosure should be measured from the face of the top riser at storey landing level of the highest storey containing a ward or wards and/or other areas to which patients have access, centrally down the pitch of each flight and centrally round each landing to the face of the bottom riser at final exit level.

11.9 It is not possible to make specific or detailed recommendations in this HTM for additional safety provision in high rise hospitals as each design must be considered on its merits.

11.10 In any hospital in which wards and other areas to which patients have access are located on a storey or storeys where the travel distance within the stairway enclosure exceeds 45 metres (see paragraph 11.8) particular attention should be given to:

a. the provision of at least two protected bed escape lifts, with sufficient capacity, to serve every storey

containing patients who would require to be evacuated by lift in the event of fire, and/or

b. additional compartmentation and/or sub-compartmentation to increase the safety of patients waiting to be evacuated.

External elevation

Vertical fire spread

11.11 Fire may spread upwards from one storey to storeys above via the windows and this is more likely if substantial quantities of material which can burn rapidly are present on the lower storey. Combustible ceiling linings and internal wall linings increase the likelihood of such fire spread, as can some types of combustible external cladding. It is recommended that ceilings to rooms adjacent to the external elevation should be Class 'O' as defined in Approved Document B2/3/4. Separation of the windows by non-combustible walls or horizontal projections between the windows on different storeys cannot prevent fire spread from storey to storey, but can reduce the possibility.

Horizontal fire spread

11.12 A storey height non-combustible wall of a minimum length of one metre on plan should be provided between unprotected areas separated by a compartment or sub-compartment wall or protected shaft. (See also paragraphs 11.17 to 11.20 for re-entrant angles).

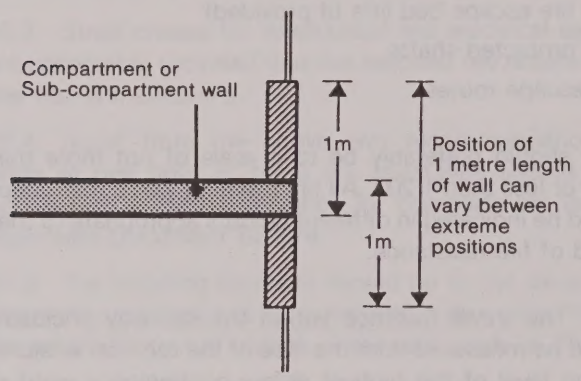

Tower and podium situation

11.13 In terms of Approved Document B2/3/4 the roof of a building is not required to have fire resistance from below. This is probably because the roof is normally expected to be the topmost element of a building. However there are many situations in hospitals where areas of roof occur at lower levels and any outbreak of fire at a lower level could, if it penetrated the lower level roof or roofs, endanger life risk areas situated above these roofs. It is therefore essential that any such roof or roofs situated below the level of adjoining and connected life risk areas should be designed as a compartment floor for a distance, which can be calculated, to provide adequate structural separation.

The design

11.14 If it is required to abut two parts of a hospital one part being high rise and the other part low rise and the high rise part contains patient accommodation and also contains windows on the elevation above the low rise roof, or does not contain windows but is of non fire resisting construction, then the low rise roof should be constructed as an element of structure in non-combustible materials to the same fire resisting standard as either the high rise or low level building, whichever is the greater, for a distance from the external face of the high rise part in accordance with the following formula; (see page 21).

Basement accommodation

11.15 Fires in basements can present a special hazard and result in a build-up of smoke and toxic products of combustion due to reduced ventilating facilities. Also access is usually more difficult and this can hinder fire fighting.

11.16 The following fire precautions are applicable to basement or windowless accommodation:

a. flammable storage should be reduced to a minimum and a high standard of freedom from fire risk maintained. Areas containing significant fire risks should be separated by fire resisting construction from the remainder of the premises and be equipped with automatic fire detection or where justified with permanently installed fire fighting equipment, eg carbon dioxide or sprinklers, as appropriate, and

b. adequate means of escape should be provided for occupants and a means of fire warning also provided, and

c. ventilation systems should be so arranged to minimise the risk of their spreading fire and smoke throughout the area, and

d. the local fire authority should be consulted as to the adequacy of smoke outlets and access for fire fighting.

See Chapter 12 for underground car parks.

Re-entrant angles

11.17 It is one of the purposes of this HTM to prevent or delay the spread of fire from one part of a hospital to another part of the same hospital by recommending the provision of compartments and sub-compartments. It is necessary therefore to take precautions to prevent or reduce the possibility of fire transfer, especially by heat radiation, by way of unprotected areas on each side of a compartment, sub-compartment, protecting structure wall where such walls abut the external elevation at, or in close proximity to, a re-entrant angle (ie the corner of a courtyard or a lightwell or the internal angle where two elevations of a building meet).

11.18 Any necessary precautions are additional to the recommendations of paragraph 11.12.

11.19 Appendix 4 contains the information and Table to calculate whether or not protection is required at a re-entrant angle and, if it is, how it should be provided.

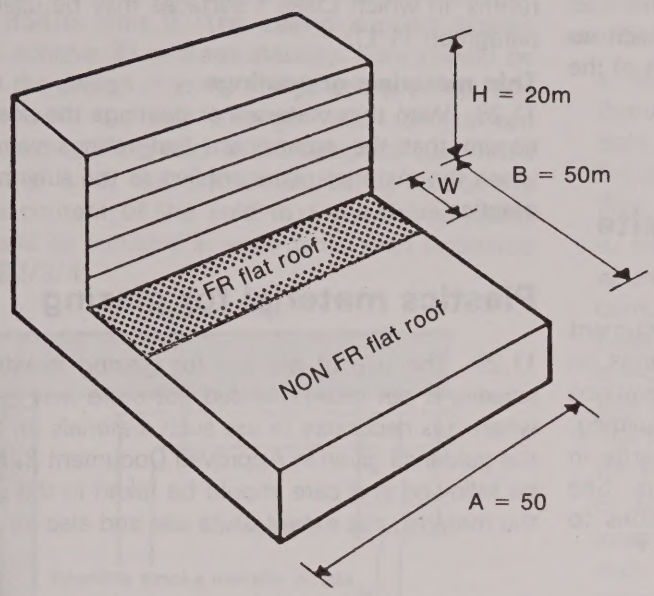

Example of calculating the width of F.R. roof

A/B = 50/50 = 1
H = 20m
H/B = 20/50 = 0.4

Using the graph below read off co-ordinate A/B = 1 and H/B = 0.4 and read W/B across on the left-hand side. This reads W/B = 0.32

Therefore
W = 0.32 x B
W = 0.32 x 50
W = 16m

Thus a strip 16m wide along the low level roof must be constructed as a fire resisting element of structure.

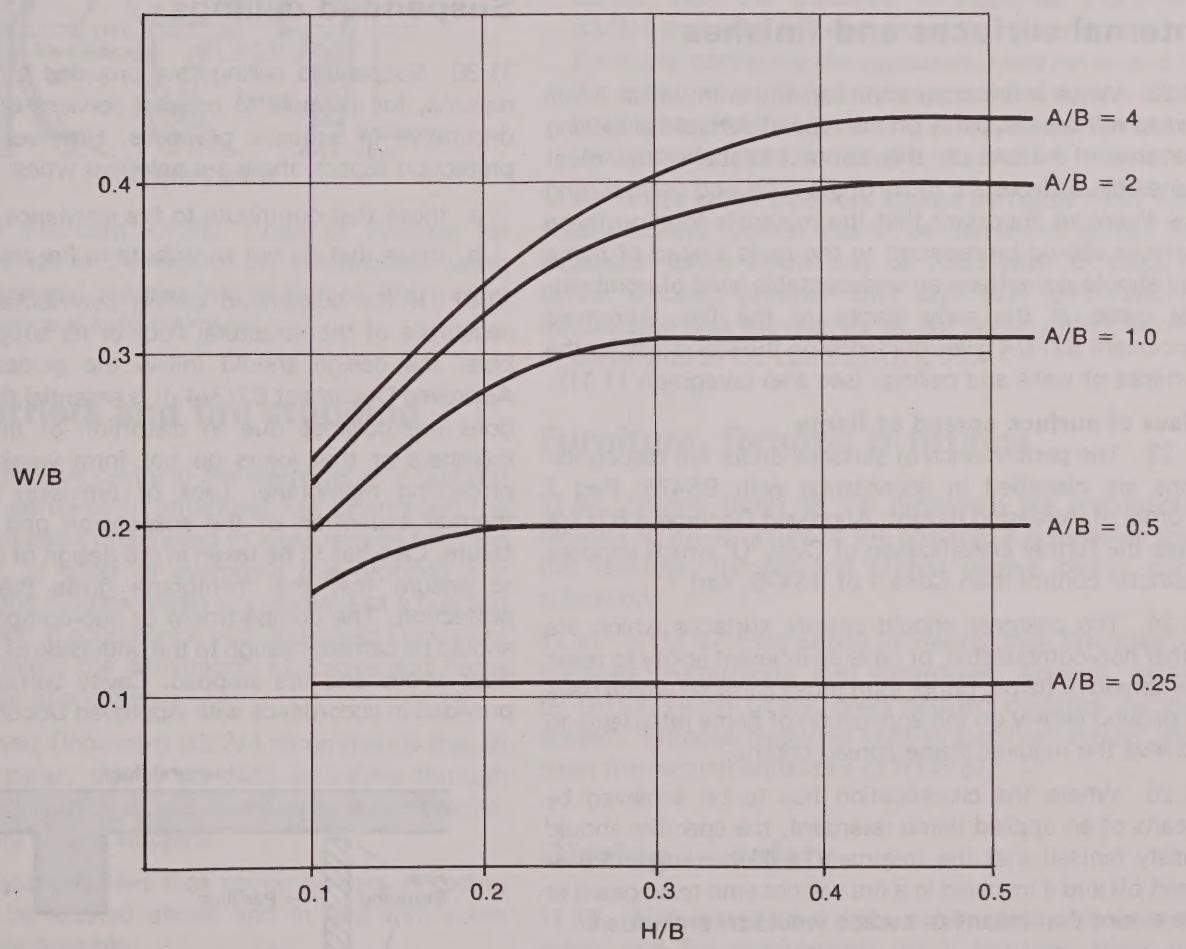

11.20 Before referring to Appendix 4 it should be noted that protection is not required to re-entrant angles in a courtyard or lightwell, irrespective of any unprotected areas abutting or adjacent to the re-entrant angle, if the courtyard or lightwell is:

a. located entirely within a compartment in which no sub-compartment wall meets the enclosing walls of the courtyard or lightwell, or

b. located entirely within a sub-compartment.

Courtyards, lightwells and opposite elevations of the same building

11.21 The practical guidance in Approved Document B2/3/4 concerning the separation between buildings on the same site should also be applied to opposite elevations of courtyards, lightwells and wings of the same building, where such opposite elevations are wholly or partly in different compartments and/or sub-compartments. See paragraphs 11.17 to 11.20 for additional precautions to re-entrant angles.

Internal surfaces and finishes

11.22 When a fire occurs the rapidity with which it will spread will depend partly on the type of surfaces enclosing the area of hazard. In this context probably the most vulnerable surfaces are those of the walls and ceilings, and it is therefore important that the materials forming these surfaces should be resistant to the rapid spread of flame and should not release an unacceptable level of combustible gases in the early stages of the fire. Approved Document B2/3/4 gives guidance on the standards for the surfaces of walls and ceilings (see also paragraph 11.11).

Class of surface spread of flame

11.23 The performance of surfaces under fire test conditions are classified in accordance with BS476: Part 7 in order of increasing hazard. Approved Document B2/3/4 gives the further classification of Class 'O' which imposes a stricter control than Class 1 of BS476: Part 7.

11.24 The designer should specify surfaces which are either non-combustible, or have an inherent ability to resist the spread of flame, rather than those surfaces which have to depend largely on the application of flame retardants to achieve the required flame spread criteria.

11.25 Where the classification has to be achieved by means of an applied flame retardant, the specifier should satisfy himself that the treatment will not deteriorate or wash off and if involved in a fire will not emit toxic gases to the extent that means of escape would be prejudiced.

11.26 In all areas forming part of an escape route the surfaces of walls and ceilings should have a Class 'O' rating, and in areas used as living accommodation or for treatment, or care or maintenance of patients, the surfaces of walls and ceilings should have a Class 'O' and Class '1' rating respectively (see also paragraph 11.11). Care must be taken to ensure that notice boards fixed to the wall surface achieve either the same standard or that their extent is within the limits given in Approved Document B2/3/4.

11.27 Approved Document B2/3/4 gives details of 'small rooms' in which Class 1 surfaces may be used (see also paragraph 11.11).

Thin materials or coatings

11.28 With thin materials or coatings the designer must ensure that the appropriate test ratings were obtained when the materials were applied to the substrate used in practice.

Plastics material for glazing

11.29 The use of plastics for glazing in windows and screens is not recommended but there may be situations where it is necessary to use such materials. In these cases the guidance given in Approved Document B2/3/4 should be followed and care should be taken in the selection of the material, the extent of its use and also its siting.

Suspended ceilings

11.30 Suspended ceilings are provided for a variety of reasons, for example to conceal services or for lighting, decorative or acoustic purposes. However, from a fire protection aspect, there are only two types:

a. those that contribute to fire resistance, and

b. those that do not contribute to fire resistance.

11.31 If the suspended ceiling contributes to the fire resistance of the structural floor or its supporting members, the design should follow the guidance given in Approved Document B2/3/4. It is essential that the ceiling does not collapse due to distortion of the supporting members or that joints do not form weak links in the protecting membrane. Lack of provision to allow for thermal expansion of the suspension grid can lead to failure. Care has to be taken in the design of access panels to ensure that the membrane gives the full design protection. The compartment or sub-compartment walls should be carried through to the underside of the structural floor above and fire stopped. Cavity barriers should be provided in accordance with Approved Document B2/3/4.

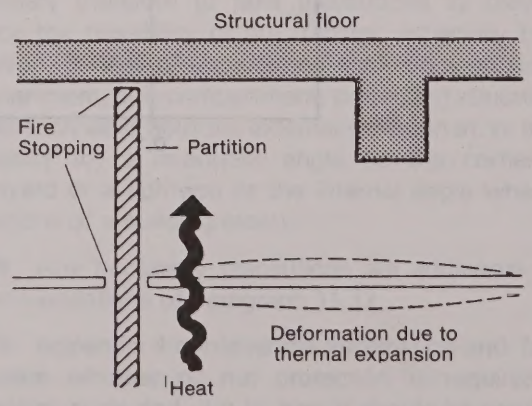

11.32 Suspended ceilings which do not contribute to the fire protection of the structural floor or its supporting members should not add to the fire hazard. The design of the ceiling should achieve at least 30 minutes stability when subjected to fire from below and tested in accordance with BS476: Part 8. The ceiling support system should also achieve 30 minutes stability. Care should be exercised in the design of joints and junctions particularly the junction with the wall through which smoke can penetrate into the ceiling void. In the design of suspended ceilings of this type, the aim should be to reduce the combustible content of the void to a minimum. Cavity barriers should be provided in accordance with Approved Document B2/3/4.

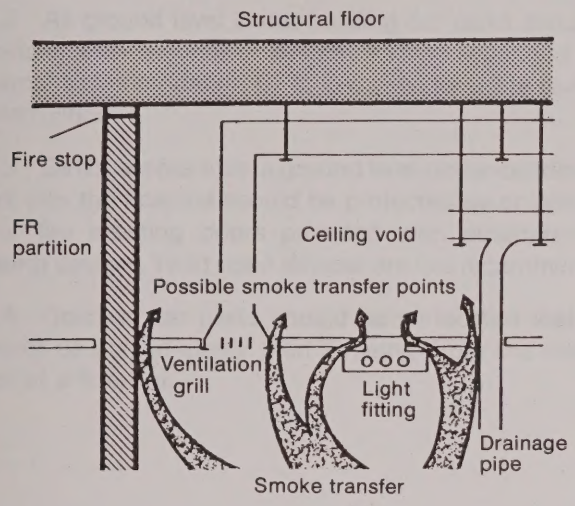

11.33 British Standard CP290 'Code of Practice for suspended ceilings and linings of dry construction using metal fixing systems' contains information on this subject to which reference should be made.

Cavity barriers and fire stopping

11.34 A continuous cavity in the elements of a building (not only the elements of structure) has often been the cause of smoke being channelled to areas remote from the seat of a fire. In order to overcome this problem it is essential that the cavities within any element of a building should be closed in accordance with Approved Document B2/3/4, to prevent the penetration of smoke and flame from one cavity to another.

11.35 Approved Document B2/3/4 recommends that all openings for pipes, ducts, conduits or cables through elements of structure should be kept as small as practicable and should be fire stopped.

11.36 It is recommended that cavity barriers in ceiling voids should be located above and in line with room partitions where possible.

uPVC pipework

11.37 The use of uPVC pipework for drainage and waste water systems within hospitals is acceptable provided the guidance given in Approved Document B2/3/4 with regard to the enclosure of drainage or water supply pipes is followed.

11.38 Following fire tests on uPVC pipes passing through compartment floors, it is considered that the enclosure recommendations in Approved Document B2/3/4 can be modified in the following three instances:

a. no enclosure is required where pipework passes through a compartment floor provided that the pipe does not exceed 55mm internal diameter and the pipe is fire stopped where it passes through the compartment floor with sand and cement mortar.

b. no enclosure is required to soil pipes from WC's where the entire pipe between the appliance and the compartment floor, and the opening where the pipe passes through the compartment floor is shrouded (ie completely covered) by the appliance, provided also that the appliance is made of non-combustible material. The pipe should be fire stopped where it passes through the compartment floor as in a. above.

c. where individual uPVC pipes, in excess of 55mm internal diameter, pass through compartment floors and such pipes are connected only to appliances on one storey, then the guidance in Approved Document B2/3/4 should be followed except that the enclosure, on the storey containing the appliances, need not extend to the structural soffit and may be stopped at a suitable height provided that the casing is capped and the entire casing constructed to meet the required fire resistance.

11.39 In all cases pipework should be rigidly fixed with steel brackets. Joints should be cemented except for expansion joints which may be fitted with 'O' rings or similar devices, provided that expansion joints and/or double pipe wall thicknesses do not occur within 300mm of either side of the compartment floor.

Furniture, fixtures & fittings

11.40 Having taken all the necessary fire precautions relevant to the structure of the hospital, it is essential that the furniture, fixtures and fittings receive careful consideration.

11.41 HTM 87 'Fire Safety in Health Care Premises — Furniture, Furnishings, Bed Assemblies, Apparel', issued by DHSS/Welsh Office, gives detailed guidance on this subject. Purpose designed built-in furniture should also meet the recommendations of HTM 87.

Glazing — safety

11.42 Wire cast glass is not a safety glass. Where both safety and fire requirements occur together, there are proprietary solutions available to the designer.

Safety — general

11.43 The Health and Safety Executive may make requirements for safety especially in hazard areas (eg plant rooms,

calorifier rooms, boiler rooms, laboratories, etc). These requirements can go beyond the recommendations of this HTM or the fire authority, and may affect the fire precautions design. Therefore the architect/engineer should consult with the HSE at an appropriate design stage.

Atria

11.44 The incorporation of an atrium or atria in a new multi-storey hospital does not meet the practical guidance of Approved Document B2/3/4. All floors should be designed as compartment floors and any openings in floors between storeys should be contained in protected shafts, except openings permitted by Approved Document B2/3/4. However, the incorporation of atria may be acceptable in certain situations provided that staff and patients are not put to any greater risk from the effects of fire, smoke and toxic gases than would be the case if such atria were not incorporated. If it is proposed to incorporate atria in any new hospital it is STRONGLY RECOMMENDED that plans and sections of the proposal are submitted to DHSS or the Welsh Office, as appropriate, for consideration.

12 Car parking

12.1 Ground level car parks should not be provided directly under patient accommodation.

12.2 All ground level under-building car parks should be provided with a sprinkler system and be separated from internal accommodation by at least one hour fire resisting construction.

12.3 Direct access from a ground level under-building car park into the hospital should be protected by at least one hour fire resisting doors provided with automatic self closing devices. Hold open devices are not recommended.

12.4 Open air car parks should be so located that cars cannot be parked closer than 2 metres from the external face of a hospital.

12.5 Underground car parks should be provided with a sprinkler system and low level mechanical extract ventilation.

12.6 No open part of a ramp to an underground car park should be closer than 3 metres to the external face of the hospital. Where the ramp passes under the hospital a roof or slab of at least 1½ hours fire resisting construction should be provided over the ramp for a distance of 3 metres from the face of the building.

12.7 Smoke extracts from underground car parks should not discharge within 3 metres of the external face of the building if there is patient accommodation on the ground or upper floors immediately above or within 6 metres on either side of the smoke extract.

13 Additional Considerations and Precautions for Wards

Considerations for Acute Wards

13.1 In addition to the structural fire precautions and means of escape provision recommended by this HTM, account should be taken of such factors as the furniture, furnishings, bed assemblies, patient observation and staffing levels when planning acute ward accommodation including acute geriatric and acute mental illness wards. Over recent years consideration has been given to the provision of doors to all patient bedrooms. This provision can serve to limit the spread of smoke and toxic gases from the room of origin to the rest of the ward. However, medical and nursing opinion is that the provision of doors can impair patient observation, delay detection of a fire in its early stages and possibly hinder patient evacuation from a ward bedroom. This issue is finely balanced and does not lend itself to definitive guidance. Local factors, including the items mentioned in the first sentence of this paragraph, will influence a final decision and for this reason it is recommended that the decision should be taken by the project team in association with the local fire authority. Reference should also be made to all relevant current guidance issued by DHSS.

Additional precautions for non acute Geriatric and non acute Mental Illness Wards

13.2 Statistics show that hospital bedroom fires are more frequent in non-acute Geriatric and non-acute Mental Illness wards due, in the first instance, to the age and frailty of the patients and their inability, in many cases, to appreciate the danger of fire or to take proper care when using smoking materials, and in the second instance to fires which are started deliberately. For these reasons patient bedrooms in non-acute Geriatric and non-acute Mental Illness wards require additional precautions as follows:

a. no patient bedroom should contain more than 8 patients and each patient bedroom should be enclosed in half-hour fire-resisting construction carried up to the structural soffit and fire stopped. The enclosing walls may be terminated at ceiling level provided that the ceiling conforms to the requirements of paragraph 14.3 a, b, d and e. (see paragraph 22.16), and

b. each patient bedroom should be provided with 30 minute fire-resisting doorsets. Single swing inward opening doors should not be provided with automatic self closing devices as they can impede patient evacuation from the bedroom in a fire emergency.

13.3 Glazed screens and glazed panels in fire resisting construction between bedrooms within the same sub-compartment should be fire resisting. The glazing construction should give half hour fire resistance when tested in accordance with BS476: Part 8 for stability and integrity and should not extend below 1200mm above finished floor level. See paragraphs 8.16 and 9.8 concerning the construction of compartment and sub-compartment walls.

13.4 Glazed screens between bedrooms and alternative means of escape circulation spaces should be fire resisting. The glazing construction should give half hour fire resistance when tested in accordance with BS476: Part 8 for stability and integrity and should not extend below 800mm above finished floor level. Glazing should not be provided between bedrooms and single direction of escape circulation spaces (see paragraph 17.17).

14 Fire Hazard Rooms and Areas

General

14.1 For most building types it is normally required to protect escape routes (protected corridors) with fire resisting walls, ceilings and doors. In hospitals this technique of providing protection is not considered acceptable since the excessive number of fire resisting doors and the requirement for such doors to be fitted with self closing devices would be an obstruction and hindrance to both staff and patients during the everyday running of a hospital. For this reason the technique advocated for hospitals is to identify and segregate fire hazard rooms, situated within a compartment or sub-compartment, by at least half hour fire resisting construction.

Structural requirements

14.2 The walls enclosing the fire hazard room should be at least half hour fire resisting construction carried up to the structural soffit or rigid roof construction and fire stopped.

14.3 Alternatively, provided that the enclosing walls do not require to be more than half hour fire resisting construction, the walls may be terminated at ceiling level provided that:

a. the ceiling to the fire hazard room is of a type which, when tested in accordance with BS476: Part 8 by exposure of the underside to fire, achieves 30 minutes stability, 30 minutes integrity and 30 minutes insulation, and

b. the ceiling extends over the top of the enclosing walls to the fire hazard room and the walls are fire stopped against the ceiling, and

c. any duct perforating the half hour fire resisting ceiling is fitted with an automatic steel fire shutter on a fusible link at ceiling level irrespective of the thickness of the mild steel duct casing (see Chapter 22), and

d. all conduits, pipes etc, perforating the ceiling are fire-stopped, and

e. all recessed fittings in the ceiling are located in ceiling recesses which maintain the half hour fire resistance of the ceiling.

See paragraph 13.2a and 22.16 for fire resisting ceilings over non-acute Geriatric and non-acute Mental Illness ward bedrooms.

14.4 All doorsets should have the same fire resistance as that required for the walls, be fitted with an automatic self closing device, have a fire resisting vision panel and latch positively against a door stop. Doors to switch and fusegear cupboards which are normally kept shut and locked may open outwards and do not require automatic self closing devices provided that they are marked FIRE DOOR KEEP LOCKED. (See also paragraph 14.14).

14.5 Fire hazard rooms should be accessible only from the open air or from an alternative direction of escape circulation space or where located within a large open area should be situated so as not to impede means of escape from that area.

14.6 Glazed screens or panels should not be located in the enclosing walls (or ceiling if the option set down in paragraph 14.3 is adopted) except as set down in paragraph 14.7.

14.7 Glazed screens/glazed panels for observation and/or supervision purposes only are permitted in fire hazard room walls included in the list below but not between the hazard room and a single direction of escape circulation space. Glazing should not be installed in any fire hazard room wall which is a compartment wall, or sub-compartment wall or protecting structure or protected lobby. Glazing should be restricted to the minimum area necessary for the required observation/supervision purpose and should not extend below 1200mm above finished floor level. The glazing should give the same fire resistance as that required for the hazard room wall when tested in accordance with BS476: Part 8 for stability and integrity only. Hazard rooms where such glazing is permitted are:

Wards

• Ward day rooms	Between dayroom and circulation space and/or day room and bedrooms.
• Physiotherapy rooms	Between physiotherapy room and circulation space or supervisory area.
• Occupational therapy rooms	Between occupational therapy room and circulation space or supervising area.

Other departments

• Laboratories	Between rooms within the laboratory only.
• Main Laundry	Between supervising office and work area only.

• Pathology department out-station	Between out-station and OPD area only.
• Pharmacy dispensing area	Between dispensing area and patient waiting area only.

Fire hazard rooms and areas

14.8 This paragraph and paragraph 14.9 list those rooms which constitute a fire hazard. As such a list cannot be comprehensive it is incumbent on the designer to satisfy himself that a room, not included in the list, has not become or is not likely to become a fire hazard due to additional content or other factors. If it is considered that such a room will be or could be a fire hazard then the necessary precautions should be taken by enclosing the room in fire resisting construction. The list has been divided into Wards and Other Departments for ease of reference. If any room listed under Wards occurs in Other Departments, or vice versa, then the room should be enclosed in fire resisting construction.

Wards

- Day Rooms
- Cleaners Rooms
- Store Rooms
- Pantry — (It is recommended that pantry doors are fitted with swing free type automatic door closers, see paragraph 20.20).
- Staff Cloaks
- Patients Clothes Stores
- Doctors Overnight Stay Rooms
- Visitors Overnight Stay Rooms
- Finishing Kitchens
- Physiotherapy Rooms
- Occupational Therapy Rooms
- Switch and Fusegear Rooms and Cupboards (See paragraphs 15.7 to 15.11).
- Kitchenettes with sink, kettle or hot water boiler and refrigerator only do not require to be enclosed in fire resisting construction.
- See paragraphs 13.2 to 13.4 for special requirements for non-acute Geriatric and non-acute Mental Illness ward bedrooms.

Other departments

- Storerooms
- Cleaners Rooms
- Medical Staff Rooms
- Libraries
- Medical Records Offices
- Medical Records Stores
- Staff Changing Rooms
- Open Clothes Hanging Areas
- Computer Rooms
- Computer Suites
- Main Kitchens
- Staff Dining Rooms
- Patient Dining Rooms
- Large Dining Rooms (more than 40 places)
- Linen Stores
- Staff Locker Rooms
- CSSD Packing and Sterilising Rooms
- TSSU Packing and Sterilising Rooms
- SDU Packing and Sterilising Rooms
- X-Ray Records Stores
- X-Ray Used Film Stores
- Chemical Stores
- Staff Common Rooms
- Lecture Rooms
- Assembly Rooms
- Laboratories
- Main Laundry — Every room in the Main Laundry in which delivery, sorting, processing, packing and storing procedures are carried out. (See paragraph 14.11).
- Occupational Therapy — Heavy Workshop, Light Workshop, Aids to Daily Living
- Wax Bathrooms (if wax is directly heated)
- Pathology Department Outstations
- Pharmaceutical Dispensing Areas
- Pharmaceutical Manufacturing Area
- Switch and Fusegear Rooms and Cupboards. (See paragraphs 15.7 to 15.11).

14.9 Some rooms, within the building perimeter, should be enclosed in higher fire resisting construction due to their location and/or contents and/or room activities. For example, certain services accommodation and laboratories and rooms containing radio isotopes or biological hazards.

14.10 For the storage of medical, pathology and industrial gas cylinders and manifold rooms for medical gas installations, reference should be made to Works Officer letter WKO(85)1 (in Wales CAWO(85)1). For the storage of flammable liquids, reference should be made to Fire Practice Note 2.

14.11 Fire safety recommendations for laundries are contained in Fire Practice Note 1.

14.12 Storage of isotopes and some flammable liquids and gases may be governed by various statutory regulations. The relevant authorities, responsible for the implementation of these regulations should be consulted.

14.13 Those rooms to which paragraph 14.9 applies should not be accessible from a means of escape route which will or could be used by patients in the event of a fire.

14.14 Irrespective of paragraph 14.4 consideration should be given to outward opening doors to those rooms referred to in paragraph 14.9.

14.15 See Chapter 15 for fire resisting construction standards for mechanical and electrical services accommodation.

15 Mechanical and electrical services accommodation and electrical distribution

General

15.1 The design, location and construction of service accommodation should take into account the possibility of fire and its consequences.

Plant rooms

15.2 Plant rooms should be separated from other accommodation by enclosures having at least half hour fire resistance (see Chapter 10) except as referred to in paragraph 15.3.

15.3 Plant rooms presenting an above average risk of fire should be separated from other accommodation by fire resisting construction of at least the same fire resisting standard as the rest of the building and never less than one hour for plant rooms at ground level and above and never less than one and a half hours for plant rooms at basement levels. These periods should be increased to one and a half hours and two hours respectively if the hospital is over 28 metres high. (See Chapter 10). Examples of such plant rooms are:

- Boiler rooms (the enclosing structure for oil fired installations should be in accordance with BS5410: 1978 or the above, whichever is the greater).
- Generator rooms.
- Incinerator rooms.
- Lift machine rooms.
- Battery rooms.
- Rooms housing electrical equipment containing in excess of 25 litres of flammable dielectric.

15.4 The services accommodation in 15.3 should not be directly accessible from a means of escape route which will or could be used by patients in the event of fire.

15.5 Irrespective of paragraph 14.4, doors for means of escape from plant rooms referred to in paragraph 15.3 should open in the direction of escape.

Service ducts

15.6 For service ducts the recommendations given in BSCP 413 should be followed.

Electrical distribution

15.7 All electrical installations should comply with HTM 7 and HTM11 and the IEE Regulations for Electrical Installations to provide safety from fire, shock and burns.

15.8 Modern electrical equipment, properly designed and protected in accordance with the IEE Regulations is not likely to catch fire. However, where electrical equipment such as distribution panels or switchgear serve more than one compartment, a fire within the compartment containing the equipment would put at risk the electrical service to the other compartment(s). It is therefore recommended that distribution panels or switchgear serving more than one compartment should be sited within the main services accommodation, or where this is not practicable separated from the accommodation served by half hour fire resisting construction.

15.9 Electrical equipment containing flammable liquids should not be installed in life risk areas or on escape routes from any accommodation within the hospital. This recommendation does not apply to individual auxiliary capacitors incorporated in apparatus such as discharge lamps and motor starters.

15.10 Enclosures or cabinets for electrical equipment necessary for purposes other than protection from fire, for example to prevent electric shock, burns, or unauthorised interference, should be of non-combustible or not readily combustible material.

15.11 The size of switchrooms, cupboards and other enclosures containing distribution panels and switchgear should be limited to preclude the storage of materials, in particular combustible materials.

15.12 Fires involving PVC cables can generate large quantities of smoke and toxic gases. Consideration should be given to the use of halogen free insulation for cables where grouped PVC cable runs will occur. Significant quantities of unprotected PVC cables should not be installed on escape routes.

Travel distances

15.13 The means of escape from plant rooms should be designed to take account of the fire hazard presented by the equipment or contents of the room and any hindrance to the movement of the occupants, for example low headroom.

15.14 The travel distance from any point within a plant room should not exceed 25 metres to the nearest exit where alternative means of escape is provided. Of this 25 metres the travel in a single direction of escape should not exceed 12 metres.

15.15 The travel distance from any point within a plant room should not exceed 12 metres to the exit where only one exit is provided. Where there is a danger that persons

could be trapped in a plant room with only one escape exit (for example, a means of escape from a water storage room which passes through a plant room containing a fire risk) alternative means of excape should be provided.

15.16 Where the risk from fire is low the travel distances can be increased to 35 metres where alternative means of escape is provided and 25 metres where single direction of escape is provided.

15.17 It should be noted that these recommendations do not take into account alternative means of escape that may be required for Health & Safety purposes (see paragraph 11.43).

16 Hospital street/main communication route

General

16.1 In the design of modern hospitals, the concept of the hospital street as the main horizontal and vertical escape route is widely used. The hospital street therefore provides the vital link between all hospital departments as well as between fire escape exits and lift enclosures on each storey and forms the main route for egress and egress for staff, patients and visitors. Main entrance halls containing accommodation should be separated from any hospital street by the required fire resisting construction. Because of its strategic importance the hospital street should be designed as a compartment (or compartments depending on its area).

16.2 If the spread of fire or smoke within a department cannot be brought under control and the available sub-compartments have become untenable for the purpose of Progressive Horizontal Evacuation, the occupants will need to be moved into the hospital street. Once inside the hospital street the occupants should be able to proceed, either unassisted or assisted by staff, towards the final exit or to a temporarily safe area within another compartment on the same storey or to another compartment on another storey.

16.3 Since the hospital street will link stairway enclosures and department entrances on upper storeys, and department entrances, stairway enclosures and final exits on ground floor storeys, it will be used by the fire brigade for ingress to the building and access to the various departments in the event of fire. The hospital street will also serve the fire brigade as a fire fighting platform.

16.4 Because of its importance the hospital street should contain no, or very little, combustible material and smoke should be dispersed or excluded by natural ventilation or by purpose designed mechanical ventilation or a combination of both systems. Caution should be exercised when designing an extract ventilation system to ensure that, in the event of a fire in a compartment/department, smoke is not drawn from the department into the hospital street resulting in an unacceptable level of smoke or smoke logging. Since the hospital street is the main escape route for the whole hospital it is essential that smoke is excluded or kept to as low a level as is reasonably practical.

16.5 Door openings between departments and the hospital street are a point of weakness in the control of smoke spread it is therefore recommended that such openings are kept to a minimum.

The design

16.6 The street should have a clear width of not less than 3 metres over its entire length except at fire resisting doors in sub-division walls across the hospital street (see paragraph 16.8).

16.7 The street should be designed as a compartment in accordance with Approved Document B2/3/4 and walls between compartments and the street and suspended floors within the street should be constructed to the same fire resisting standard as the elements of structure for the building but never less than one hour.

16.8 The street should be sub-divided across its entire width to half hour or half the fire resisting standard of the hospital, whichever is the greater, so that entrances/exits between compartments/departments and the hospital street are separated from the entrance to a stairway enclosure and a lift enclosure. Entrances into stairway and lift enclosures may be contained within the same sub-division. The distance between hospital street sub-division walls should not exceed 32 metres. Compartment/department entrances/exits in any one sub-division of the Hospital Street should be kept to the minimum.

16.9 Each sub-division should be provided with adequate means of natural ventilation or purpose designed mechanical ventilation or a combination of both so that should any smoke leak into the street from adjoining departments/compartments it is dispersed or extracted. Alternatively, a pressurisation system which operates on activation of the fire alarm and is designed to keep the street free from smoke at least during the early stages of a fire and the evacuation of the occupants, may be provided. Care should be taken in the design of such a system that smoke or dirty air cannot compromise otherwise clean areas in the hospital.

16.10 The hospital street should provide access to at least two fire escape stairways (which should be designed for mattress evacuation — see Chapter 18) and at least two final exits at ground level. Stairway enclosures which serve hospital streets should be located not more than 64 metres apart. Alternative means of escape should be provided from each compartment/department exit. Single direction of escape (see paragraph 16.11) between the exit from a compartment/department and an escape stairway should be avoided, but if absolutely essential should only occur on storeys above the ground level storey.

16.11 Escape stairways serving a hospital street above the ground level storey should be located so that the travel distance between a compartment/department exit and the entrance into the nearest escape stairway does not exceed 32 metres if alternative means of escape is provided and does not exceed 15 metres if the means of escape is in a

single direction only. Single direction of escape is not recommended but if unavoidable should be restricted to extremities of the hospital street only.

16.12 Final exits serving a hospital street at ground storey level should be located so that the travel distance between:

a. a compartment/department exit into the hospital street and the nearest final exit does not exceed 96 metres, and

b. a stairway enclosure serving upper storeys and a stairway enclosure serving basement storeys, which do not contain a final exit or a protected escape route leading to a final exit, does not exceed 96 metres from the exit from the stairway enclosure into the ground storey hospitals street and the nearest final exit.

16.13 At ground storey level a final exit should be provided at every extremity of the hospital street to ensure that alternative means of escape is available from any point within the street and dead-ends do not occur.

16.14 Final exits which serve a hospital street should be directly off the hospital street.

16.15 Stairways which serve upper storeys should terminate at a storey level from which final exits are available (see paragraph 18.12).

16.16 Escape stairways and final exits serving a hospital street/main communication route below the ground level storey (that is a storey which is entirely or in part below ground level) should be located so that alternative means of escape is provided from every compartment/department entrance/exit into the hospital street. The travel distance from each compartment/department entrance/exit should not exceed:

a. 96 metres to each of two final exits, or

b. 96 metres to a final exit AND 32 metres to an escape stairway (see paragraph 7.5) or

c. 32 metres to each of two escape stairways (see paragraph 7.5).

If option (b) is provided and the storey contains a department or departments to which patients have access, protected lobbies should be provided to every department entrance/exit and the hospital street on that storey only, irrespective of whether or not a department provides access for patients. The protected lobbies are additional to any recommended sub-division of the hospital street (see paragraph 16.8) and should be provided within the department area and not across the hospital street. The protected lobbies should be constructed to the required fire resistance for the building. Openings between the department and protected lobby should be protected to half the required fire resistance for the building and openings between the protected lobby and hospital street should be protected to the required fire resistance for the building.

16.17 At all storey levels below ground storey level an escape stairway or final exit should be provided at every extremity of the hospital street to ensure that alternative means of escape is available from any point within the street and dead-ends do not occur.

16.18 Stairways which serve basement storeys should terminate at a storey level from which final exits are available (see paragraph 18.12).

16.19 No accommodation should be situated within a hospital street enclosure except sanitary accommodation.

16.20 A protected shaft, containing only mechanical and electrical services, opening directly into a hospital street is acceptable provided the following recommendations are observed:

a. Any access opening between the protected shaft and the hospital street should be protected by a door assembly giving the same fire resistance as the protecting structure.

b. Automatic self closing devices do not need to be fitted to the door or doors, provided they open through a nominal 180° and are labelled in mandatory format on both faces of each leaf —

FIRE DOOR. KEEP LOCKED SHUT WHEN NOT IN USE.

c. In every case where an access opening is provided between a protected shaft and a hospital street a chequer plate or similar floor should be provided at that hospital street level over the entire free area of the protected shaft.

16.21 The street should contain no fire load except items in transit to the various departments. It should not be used as a place for temporary storage and must be kept free from obstruction at all times.

16.22 Wet or dry risers, if required, should be located in accordance with the local fire authority's requirements.

17 Means of Escape

General

17.1 For most building types the basic principle for escape in the event of fire is that the occupants can always turn their backs to the fire and travel away from it directly through circulation spaces and stairways to a place of safety outside the building.

17.2 The application of this principle embodied in the recommendations of this HTM is that from any point in a hospital there should be alternative means of escape (with certain exceptions) to a place of safety and that the escape to a place of safety should be direct.

17.3 In accordance with the requirements of Progressive Horizontal Evacuation an initial place of safety may be reached by escape into an adjoining sub-compartment or compartment but all escape routes should eventually lead to a place of ultimate safety ie the open air free from the effects of fire and smoke.

Escape route

17.4 An escape route may comprise a space, room, circulation space, hospital street, stairway, ramp or protected bedlift.

17.5 The escape route should be as simple and obvious as possible ie by way of not more than one inner room, one access room and a doorway leading into a circulation space, and thereafter ONLY by way of a circulation space, hospital street, stairway, ramp or protected bed lift to reach a final exit. (Except for the relaxation in paragraphs 8.20 to 8.23). An access room, as illustrated below, should not be a fire hazard room.

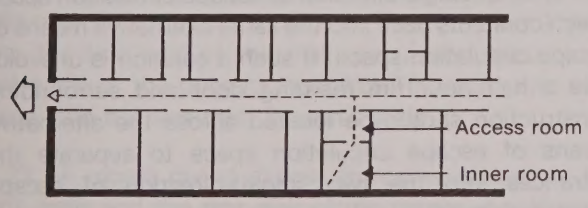

17.6 In areas designed for staff use only the escape route maybe by way of more than one inner room but additional fire protection such as automatic detection should be provided within all inner rooms en-suite. It is essential that the fire alarm system can be clearly heard in all inner rooms. Doors between inner rooms and between an inner room and access room should be provided with vision panels in the absence of other glazing. If an access room is off a single direction of escape circulation space then there should be no more than one inner room unless the inner rooms are provided with alternative means of escape separate from the single direction of escape circulation space.

17.7 When designing the escape routes in a hospital it is imperative that the escape routes will be available to patients and staff at all times.

17.8 Escape routes which pass from one area through a department or area which is locked at any time, eg certain departments or areas which only operate during the working day or during week days are not permitted unless lock release devices are provided to open the lock on the direction of escape side of the door. Lock release devices requiring the use of a key are not acceptable.

17.9 Under no circumstances should doors across circulation spaces, hospital streets, other communication routes, entrances to protected lobbies, stairways, ramps etc, or any other door across an escape route (except to individual rooms) be fitted with a lock or locks or any other securing device except:

a. Final exits, and

b. Exits to roof escape routes

Doors listed in a. and b. above should only be fitted with securing devices which permit the opening of the door or doors from the inside at all times without the use of a key.

17.10 Doors into courtyards, which form part of an escape route, should be capable of being opened on the side from which escape is to be effected (ie both sides if alternative means of escape is provided) at all times without the use of a key. See also paragraphs 17.24 and 17.25.

17.11 All escape routes should lead to a final exit.

Alternative means of escape

17.12 The principle of providing alternative means of escape from any point in a hospital is of primary importance and is a major factor in ensuring the safe evacuation of all occupants in the event of fire.

Single direction of escape

17.13 There are instances when it is neither possible nor practical to provide alternative means of escape from all parts of a storey, for example, a room. In limited situations and providing additional precautions are taken, a single direction of escape is acceptable (see paragraphs 17.17 and 17.18).

Location of alternative exits

Compartment and sub-compartments

17.14 It is not possible to give precise recommendations as to the location of alternative exits from a compartment or sub-compartment. Much will depend on the compartment and sub-compartment layout of a particular design solution. However, the main circulation space, ie the main escape route, within a compartment and sub-compartment should connect with the two or three exits required by Chapters 8 and 9 and should be as direct and obvious as possible. The aim should be to locate the main exits as far apart as practicable and in opposite walls of the compartment and sub-compartment. It is recognised that this is not always possible to achieve and therefore other solutions may be equally acceptable provided that the escape route between the main exits ensures a safe and satisfactory alternative means of escape and that all other recommendations, contained in this Chapter are observed.

Rooms

17.15 In those rooms which require alternative means of escape it is essential that the exits from the rooms are located as far apart as possible, preferably in opposite walls of the room. The exits should preferably open into areas which are separated from each other by fire resisting construction. At least two of the alternative exits should be located so that the angle of divergence from any point within the room to the centre of the two exits is not less than 45 degrees; or if from any point at which that angle is less than 45 degrees the distance to be travelled between that point and the nearest exit does not exceed the maximum single direction of travel distance recommended in this document relevant to the particular type of accommodation.

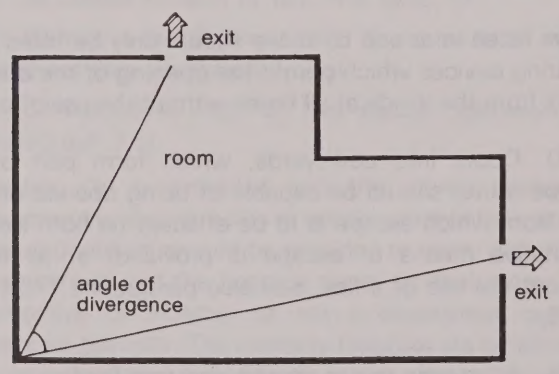

Emergency exits

17.16 Emergency fire escape exits, eg as an alternative means of escape from an area or room where work of a hazardous fire nature is carried out, may be installed provided the door is fitted with a permanently operating automatic self-closing device. The door should not open into any part of an escape route which is used, or could be used, by patients, and, if required, is fitted with a securing device which permits the opening of the door from the room side at all times without the use of a key. The door should bear the sign 'EMERGENCY EXIT ONLY'.

Single direction of escape

Special precautions

17.17 A single direction of escape in circulation spaces is not recommended especially in circulation spaces used by patients. Such situations should be avoided or kept to a minimum. If it is not possible to avoid all such situations then the following precautions should be observed:

a. Any part of a circulation space which has a single direction of escape only should be enclosed in half hour fire resisting construction.

b. Any single direction of escape circulation space which leads to a circulation space having alternative means of escape should be separated from the circulation space having alternative means of escape by a half hour fire resisting door or doors opening in the direction of escape.

c. Where a single direction of escape circulation space meets an alternative direction of escape circulation space, the angle of divergence should not be less than 90°.

d. The escape route having a single direction of travel must not exceed 15 metres measured in accordance with paragraph 17.70.

e. No accommodation should be located within the single direction of travel circulation space.

f. Glazing is not acceptable between the circulation space and adjacent rooms if any room is provided for:

i. patient accommodation

ii. patient use

iii. staff and/or visitors sleeping accommodation

unless each room with access off the single direction of escape circulation space is provided with alternative means of escape separate from the single direction of escape circulation space. Such provision is solely for the room occupants and does not modify the single direction of escape circulation space into an alternative means of escape. Caution is required to ensure that such secondary means of escape does not discharge into another single direction of escape circulation space which connects back into the same alternative means of escape circulation space. If such a solution is unavoidable a half hour fire resisting door and surrounding construction should be located across the alternative means of escape circulation space to separate the entrances into the two single direction of escape circulation spaces.

g. Where glazing is permitted, between the circulation space and adjacent rooms, the glazing construction should give half hour fire resistance when tested in accordance with BS476: Part 8 in respect of stability and integrity only. Glazed screens or glazed panels should not extend below a level of 1200 mm above finished floor level.

h. Fire hazard rooms (See Chapter 14) should not be provided with access off single direction of escape circulation spaces.

17.18 A single direction of escape circulation space need not be enclosed in fire resisting construction or be provided with a door or doors between the single direction of escape circulation space and alternative direction of escape circulation space provided:

a. it gives access to one room only, and

b. the room does not contain sleeping accommodation or patient accommodation, and

c. the room is not a fire hazard room, and

d. the travel distance from the nearest face of the alternative means of escape circulation space does not exceed the following dimensions:

i. if the access door to the room is located in the side of the single direction of escape circulation space the travel distance should not exceed 3 metres to the centre of the door opening,

ii. if the access door to the room is located in the end wall of the single direction of escape circulation space the travel distance should not exceed 3 metres to the face of the door.

The travel distance from the furthest point in the room to the alternative means of escape circulation space should not exceed 15 metres.

Door recesses

17.19 The recommendations contained in paragraph 17.17 a., b., c., e. and f. do not apply where door recesses are provided directly off alternative means of escape circulation spaces provided that the recommendations set out in paragraphs 17.20 to 17.23 are observed.

17.20 A recess giving access to a room or rooms on the rear wall only of the recess should not be more than 2 metres deep and not less than 1 metre wide.

17.21 A recess giving access to a room or rooms on one flank wall only of the recess should not be more than 2 metres from the side wall of the main circulation space to the centre line of the door furthest from the main circulation space, and not less than 1 metre wide.

17.22 A recess giving access to rooms on both flank walls only of the recess should not be more than 2 metres from the side wall of the main circulation space to the centre line of the door furthest from the main circulation space, and not less than 2 metres wide.

17.23 A recess giving access to rooms on one or both flank walls and the rear wall of the recess should not be more than 2 metres deep and doors on the rear wall should not be less than 2 metres from a flank wall containing a door or doors.

Courtyards

17.24 An escape route should not pass through a courtyard unless it is absolutely necessary. If an escape route is provided through a courtyard which does not contain an exit leading directly to a place of safety in the open air, without passing back into the building, then, two entrances/exits should be provided and these should:

a. be located to meet the recommendations of paragraph 17.15, and

b. be separated from each other, within the hospital, by compartment or sub-compartment construction, and

c. be capable of being opened from the direction of escape at all times without the use of a key or similar device, and

d. if providing a single direction of escape only be clearly labelled FIRE EXIT on all door faces only from which the direction of escape is to be effected, and

e. if providing an alternative means of escape be clearly labelled FIRE EXIT on both faces of all doors across the escape route.

Items c. and d. above are also applicable to a means of escape route which passes through a courtyard containing an exit leading directly to a place of safety in the open air.

17.25 Although most courtyards will not contain or be part of a designed escape route nearly all courtyards will require access for maintenance and many may be designed for staff or patient use. If any of these circumstances arise consideration should be given to the possibility of a courtyard being used in error as a means of escape in the event of fire. It is recommended therefore that:

a. any courtyard with access for maintenance only should have the access door permanently locked except while maintenance is taking place and the access door should bear the sign 'NO EXIT', and

b. any courtyard designed for staff or patient use should be provided with at least two entrance/exit doors located in accordance with paragraph 17.15 and, if possible, separated from each other, within the building, by compartment or sub-compartment construction.

Circulation spaces

17.26 The circulation spaces are the routes within a department giving access to the various rooms and areas, the department entrance and any necessary exits. For the purpose of this HTM the term 'circulation space' does not include the circulation space within a room, except within a ward bedroom where the compartment (sub-compartment) exit is designed in accordance with the recommendations in paragraphs 8.20 to 8.23. The circulation space within a room must be included when measuring travel distances.

17.27 All circulation spaces will form part of the escape route within a department and therefore should be planned in accordance with the recommendations of this HTM. Circulation spaces should not pass through and continue beyond a stairway enclosure or a stairway and lift enclosure.

17.28 When designing the escape routes in a hospital it is necessary to estimate the number of persons who will be using the escape route or escape routes, in the event of a fire emergency, so that the escape routes can be designed to the optimum widths.

17.29 The number of persons which a room, sub-compartment, compartment, storey or building will hold when in use is known as the occupant capacity.

17.30. In certain areas of a hospital the likely number of occupants will be known at design stage but in other areas the occupant capacity will vary from day to day or even from hour to hour, for example in OPD, in ward bedrooms, in libraries, restaurants, cafeterias, committee rooms etc.

17.31 It is necessary for the designer to assess the maximum number of persons likely to be in certain areas when calculating the minimum widths of escape routes. The number of staff — medical, nursing, professions supplementary to medical, cleaning, administrative, voluntary services, etc, should be included together with in-patients, out-patients and visitors. For example in ward bedrooms the maximum occupant capacity is most likely to occur at visiting times when the majority of patients are in the ward as well as members of the nursing staff. However, at visiting times, the occupant capacity can vary considerably between different types of wards. Similarly in OPD the number of staff and patients can vary considerably from one day to the next.

17.32 In departments where beds and/or patient trolleys have to be moved through circulation spaces or where patients will be using wheelchairs and/or walking aids the minimum width of the circulation space required for these activities should be adequate for escape purposes.

17.33 In departments or areas where the above equipment or facilities will never pass or be used, and in this respect care must be taken to ensure that such equipment will never be used for escape purposes through the department or area, the minimum recommended width of the circulation space should not be less than 1.1 metres for up to 200 people using the escape route and an additional 530mm for every 100 additional persons or part thereof. See paragraphs 17.73 to 17.81 for additional requirements for assembly rooms.

17.34 Accommodation may be planned as an open area off a circulation space but only off a circulation space which provides alternative means of escape. Fire hazard rooms and non-acute geriatric and non-acute mental illness bedrooms should not be planned as an open area off a circulation space or room.

17.35 Such open areas should be kept to a minimum and only be provided if they are absolutely essential to the everyday running of the department and if the fire risk and fire load of the activities and furnishings of the area do not present a danger to persons using the circulation space as a means of escape, in the event of fire, from other rooms and areas of the department. For example, a sub waiting area under staff observation would present an acceptable design solution whereas a sub waiting area not under staff observation and furnished with polyurethane foam upholstery could present a potential fire hazard.

17.36 Since all circulation spaces form part of an escape route they should be kept free from obstruction at all times even when they pass through or alongside an open area.

17.37 No accommodation should be located as an open area off a single direction of escape circulation space.

17.38 To minimise the risk that persons escaping from a fire may lose their sense of direction in a smoke logged circulation space that passes through or alongside an open area, such open areas should be restricted in depth to not more than three times the width of the immediately adjacent circulation space measured at right angles to the circulation space.

Floors of escape routes

17.39 Escape routes within each storey of a hospital should be on one level, and changes in level should be avoided. However, if a change of level is absolutely unavoidable then in-patient areas or areas to which patients will or may have access, should not contain steps, and ramps should not exceed a gradient of 1 in 20. Ramps used solely for supplies distribution are not required to meet this recommendation but if such ramps are to be used for means of escape then the means of escape should only be in a downward direction and the ramp should not exceed a gradient of 1 in 12.

Height of escape routes

17.40 All escape routes should have a minimum clear headroom of 2050mm between the finished floor level and the underside of any obstruction such as structural beams, light fittings, suspended or projecting signs etc.

Width of escape routes

17.41 The width of escape routes should be based on:

a. the occupant capacity they are designed to serve, subject to paragraphs 17.32 and 17.33, or

b. the beds and/or equipment which will require to be moved through the circulation spaces and escape routes either during the everyday running of the hospital or in a fire emergency.

The minimum width of an escape route should be whichever is the greater of these two factors. See DHSS/Welsh Office HBN 40 Common Activity Spaces Volume 2: Corridors, for ergonomic data and Chapter 18 for stairway widths.

Final exits

17.42 A final exit should not open immediately onto or from a step or steps or a ramp. However, where there is a possibility of rain penetration at floor level a threshold may be provided. A threshold should not exceed 15mm in height.

17.43 The floor on both sides of the exit door should be level (except externally it should be laid to fall to throw off rain water) for a distance of at least one metre.

17.44 If the exit door is to be used for the evacuation of beds, by wheelchair users or by physically handicapped patients, steps should be avoided between the exit door and an external place of safety (external assembly position).

17.45 All final exit doors should be capable of being readily opened from the inside and should never be provided with locks requiring a key for opening. Automatic

final exit doors should open outwards and be freely openable by hand under any condition, including power failure, otherwise adjacent non-automatic outward opening doors should be provided. Security of external escape doors against unauthorised intruders requires careful consideration. Attention is drawn to devices which enable final exit doors to be kept locked but released on activation of the fire alarm/detection system and in the event of a power failure.

17.46 Exit doors to escape routes across flat roofs should be provided with adequate artificial lighting.

17.47 Final exits should be provided with adequate artificial lighting.

External escape routes

External escape routes at ground level

17.48 Should it become necessary, in the event of a fire, to evacuate an entire hospital or part of a hospital proper provision of external assembly positions should be available. Such positions may be the roadways, hard standing or suitably designed parts of the landscaping all within the site curtilage. In situations where the hospital has no external ground and all escape exits discharge directly onto a public highway or discharge so close to a public highway that there is insufficient ground for an external assembly position or such an external assembly position would be too close to the hospital for safety then it is necessary to contact the local authority and local fire authority to agree the method of dealing with the possible evacuation of the entire hospital in an emergency. In large hospitals, adequately protected by compartmentation and sub-compartmentation and other structural fire precautions, it is considered unlikely that the evacuation of the entire hospital will ever be necessary.

17.49 External assembly positions should not be designed as cul-de-sacs (ie surrounded by walls or other barriers from which there is no further escape) and should be accessible for ambulances.

17.50 The external escape route between the final exit and the external assembly position should be paved and laid level, except to ensure that water does not collect on the surface which could freeze in cold weather.

17.51 If the external escape route passes onto or across a road with kerbs then, where the route passes onto and off the road, the pavement and kerb should be ramped.

17.52 Apart from ramps onto and off roadways, ramps should not be provided but if absolutely necessary should not exceed a gradient of 1 in 20 if rising towards the assembly position or 1 in 12 if falling towards the assembly position.

17.53 External assembly positions, and the external escape routes to them, should be artificially lit.

17.54 Any wall or other part of the hospital within 3 metres of an external escape route should have the same fire resistance as recommended by Approved Document B2/3/4 for the elements of structure of the hospital. Windows may be installed provided that they are fixed shut and the glazing construction gives at least half hour fire resistance when tested in accordance with BS476: Part 8 in respect of stability and integrity only.

17.55 No part of the external escape route should be situated less than 3 metres from any ventilation or other system extract from the building.

Roof escape routes

Unenclosed escape routes across roofs

17.56 Unenclosed escape routes for patient use across roofs are not acceptable unless:

a. the roof is flat and gives direct access to ground level without a change in level between the roof and the ground, or a ramp, not exceeding a gradient of 1 in 20, is provided between roof level and ground level, and

b. the escape route across the roof is a minimum clear width of 2 metres and is protected on each side by a balustrade in accordance with the recommendations of Approved Document K2/3, and

c. the roof escape route is constructed as an 'element of structure' of non-combustible materials and to at least the same fire resisting standard as that part of the building it covers to include the full width of the escape route and a minimum distance of 3 metres on each side of the escape route. The total minimum width of 8 metres should be structurally self supporting, and

d. except where the escape route connects to an exit from the building onto the roof, no part of the escape route should be closer than 3 metres from any wall which is above the level of the flat roof and contains unprotected areas. This restriction is waived if the wall contains no unprotected areas and is constructed throughout of non-combustible materials, and

e. no part of the escape route should be closer than 3 metres from the edge of the roof if the wall below the edge contains unprotected areas, and

f. no part of the escape route should be situated less than 3 metres from any ventilation or other system extract from the building or from any roof opening or roof light.

17.57 An unenclosed escape route for staff use only across a flat roof may discharge into an escape stairway provided that:

a. the stairway is fully enclosed, and

b. the escape route serves staff areas only and can never be used by patients in a fire emergency, and

c. the recommendations b. to f. inclusive in paragraph 17.56, above, are met.

17.58 Unenclosed escape routes across flat roofs, not necessarily constructed as an element of structure, as a means of escape from roof level plant and tank rooms are acceptable provided that:

a. the escape route is restricted solely for use by engineering and maintenance staff and maintenance contract personnel, and

b. at least two fire escape stairways, or escape ladders, are provided as an alternative means of escape from roof level/plantroom level, and

c. any escape route across the roof is a minimum clear width of 1 metre and is protected on each side by incombustible walls or a balustrade in accordance with the recommendations of Approved Document K2/3.

Provided the recommendations a. to c. inclusive above are met any vertical escape from the roof level to a lower level or ground level may be by ladder, provided the ladder is suitably guarded, and the junction of the roof level escape route and the ladder is suitably guarded. Where a parapet wall is involved ladder access to a guarded platform crossing the parapet wall should be provided.

Enclosed escape routes across roofs and across bridges

17.59 Enclosed escape routes for staff and patient use across flat roofs and bridges giving access to an escape stairway are acceptable provided that:

a. the recommendations b. to f. inclusive in paragraph 17.56 above are met (except the requirement in b. for a balustrade), and

b. the stairway is fully enclosed, and

c. the stairway is designed for mattress evacuation if for patient use, and is additional to the minimum requirement for exits from each compartment and sub-compartment in accordance with paragraphs 8.3, 8.5 a. and b. or 8.11, 8.13 a. and b. and 9.5 b. and c., and

d. 30 minute fire resisting doorsets and surrounding construction are provided in the opening where the escape route passes through the external wall of the building, and

e. at least 30 minute fire resisting doorsets are provided to the entrance into the stairway enclosure if the stairway serves more than one storey.

17.60 Enclosed escape routes across flat roofs and bridges connecting two parts of a building on the same level are acceptable provided that:

a. the recommendations b. to f. (except the requirement in b. for a balustrade) inclusive, in paragraph 17.56 above, are met, and

b. the escape route connects parts of the hospital which are separated by compartment construction, and

c. 30 minute fire resisting doorsets are provided in the opening where the escape route passes through an external wall of the hospital, and

d. the doors mentioned in c. above and any other doors within the escape route where it passes over the roof, or across the bridge, can be opened from either side at all times. These doors should not be fitted with locks, bolts or any other securing device, and

e. no accommodation is provided within the enclosed escape route.

Travel distances should be measured to the final exit or hospital street or adjoining compartment and not to the entrance into the enclosed escape route or bridge.

Escape routes from roof spaces and ceiling voids

17.61 In roof spaces and ceiling voids with access for service and maintenance personnel the following recommendations should be followed:

a. Alternative means of escape should be provided from each sub-compartment and cavity within the roof space and ceiling voids, and from each cavity within the roof space if the recommendations of paragraph 9.9 have been adopted.

b. Where the maximum travel distance does not exceed 15 metres and the escape route does not pass through a significant fire risk area the alternative exit may not be required. If the escape route passes over a significant fire risk area on the floor below and the ceiling is non-fire resisting alternative means of escape should be provided.

17.62 The escape route should allow exit in case of fire 24 hours a day.

17.63 Exits from the roof space and ceiling void should be provided with fire alarm call points. The fire alarm system should be clearly audible within these spaces. Additional sounders may be necessary in the roof space and/or ceiling voids.

17.64 Means of escape exits may be:

a. via a trap door and fixed ladder to the floor below, or

b. to a flat roof to meet the recommendations of paragraph 17.58 a. and c., or

c. to an adjoining compartment, or

d. to an adjoining protected shaft containing only mechanical and/or electrical services, or

e. to an adjoining sub-compartment, or

f. to an adjoining cavity.

All the above exits should give eventual access to an escape route leading to a final exit.

17.65 Travel distances should be measured from the point in the roof space or ceiling void furthest from any one of the exits listed in paragraph 17.64.

17.66 Travel distances should not exceed those given in paragraphs 15.14 to 15.16 or 17.61 b.

Phased developments

17.67 In phased developments it is essential that the means of escape requirements contained in this HTM concerning escape routes, travel distances, stairways, etc are provided to every phase when occupied even if this entails temporary provision until such time as the next phase or the entire hospital is completed. Existing escape routes should be maintained and protected during the construction of later phases.

Travel distances

17.68 The recommended travel distances are included in the relevant Chapters on Compartments, Sub-Compartments, Hospital Street, Escape Stairways, Services Accommodation and this Chapter.

17.69 Travel distances should be measured from the point in a room furthest from the door, to the centre of the door (avoiding all obstructions) then through the circulation space to a door into:

a. an adjoining compartment, or

b. an adjoining sub-compartment, or

c. an adjoining area separated by fire resisting construction, or

d. an exit to an escape route across a flat roof to comply with paragraph 17.56, or

e. a ramp, or

f. an exit to an escape stairway, or a protected lobby to an escape stairway in a Small Detached Hospital Extension, or

g. a hospital street, or

h. a final exit.

17.70 In single direction of escape circulation spaces the travel distance should be measured from the point in a room furthest from the door, to the centre of the door (avoiding all obstructions) then to the centre of the circulation space and then to the centre of the alternative means of escape circulation space.

17.71 The single direction of escape distances are part of and not additional to the total permissible travel distances.

17.72 In an access room leading to an inner room that part of the escape route which traverses the access room should be measured from the centre of the door between the inner room and access room and the centre of the door between the access room and circulation space.

Assembly rooms

17.73 Most hospitals contain rooms where large numbers of persons congregate at varying times, such as staff restaurants, lecture rooms, assembly halls, etc, and these rooms may require additional escape exits.

17.74 Any room where 31 persons or more will assemble at any one time should be provided with at least 2 escape exits each discharging into circulation spaces or escape routes separated from each other by fire resisting construction or directly to the open air through final exits. Escape doors from the room should open in the direction of escape.

17.75 The minimum number of exits required and the minimum width of each exit is as follows:

31 – 200 persons	2 exits 1.1 metres minimum width
201 – 300 persons	3 exits 1.2 metres minimum width
301 – 400 persons	3 exits 1.4 metres minimum width
401 – 500 persons	4 exits 1.6 metres minimum width

(See paragraph 9.13 for additional exits in patient areas).

17.76 The width of any circulation space, staircase or lobby used as an escape route should not be less than the width of the exit discharging into it.

17.77 The escape routes from places of assembly designed to accommodate 100 persons or more should be kept separate from escape routes for patient use but may discharge into a hospital street/main communication route.

Travel distances

17.78 The maximum travel distance from any point in the room to the nearest escape exit from the room should not exceed 18 metres. In rooms where provision is made for closely seated audiences or assemblies by permanently fixed or occasional seating the travel distance should be measured along seatways and gangways or circulation spaces within the room.

17.79 Where alternative means of escape is provided from a room exit the travel distance should not exceed 32 metres, in each direction, to any of the following:

a. a final exit

b. a hospital street

c. an adjoining compartment

d. an adjoining sub-compartment

e. an escape stairway

f. an exit to an escape route across a flat roof designed in accordance with paragraph 17.56.

17.80 Where single direction of escape is provided from a room exit the travel distance should not exceed 15 metres to any one of the following:

a. a final exit

b. a hospital street

c. an adjoining compartment

d. an adjoining sub-compartment

e. an escape stairway

f. an exit to an escape route across a flat roof designed in accordance with paragraph 17.56.

17.81 Exits should be located in accordance with the recommendations of paragraph 17.15.

18 Escape stairways, lifts, bedlifts, and protected lobbies

General

18.1 It is important that the designer of a new hospital is familiar with the content of Chapter 7 and particularly paragraph 7.9, since, after initial horizontal evacuation of patients from a sub-compartment on fire, a combination of horizontal and vertical (stairways) movement may become necessary.

Stairways

18.2 Provided that every new hospital is designed in accordance with the recommendations of this HTM and Progressive Horizontal Evacuation of patients is implemented in the event of fire, it is considered unlikely that an entire hospital will need to be evacuated immediately. The safeguards provided by dividing each storey into compartments and sub-compartments will give staff and the fire brigade time to carry out an orderly evacuation of a storey should this become necessary. It is however necessary to provide the minimum number of fire escape stairways as recommended in paragraph 18.5 and in certain cases additional stairways as recommended in paragraph 18.7.

18.3 The practice of designating certain stairways as escape stairways and others as communication stairways only is not acceptable since in an emergency any stairway, except possibly accommodation stairways, will be used if necessary. Therefore all stairways should be designed as escape stairways in accordance with the recommendations of this Chapter.

Protected Shafts

18.4 All stairways (other than accommodation stairways) lifts, hoists, ramps and service shafts connecting compartments should be enclosed in protected shafts in accordance with Approval Document B2/3/4. It is recommended that protected shafts in hospitals should be constructed of solid masonry. In every case where an access opening is provided between a protected shaft containing only mechanical, electrical or any other services and the accommodation, a chequer plate or similar floor should be provided at that floor level over the entire free area of the protected shaft. See paragraph 16.20 for additional precautions to mechanical and electrical service shafts with direct access off hospital streets/main communication routes.

Number and siting of stairways

18.5 The minimum number of escape stairways in any hospital or hospital extension of more than one storey should be:

a. a hospital and a hospital extension with hospital streets — TWO

b. a hospital extension without hospital streets — THREE

18.6 The majority of hospitals will normally contain an adequate number of escape stairways due to functional requirements. It is possible, however, that some hospitals could be underprovided, especially high rise compact designs which contain large numbers of patients on upper storeys. In these instances, and for reasons set out in paragraph 11.6, additional stairways may be necessary. On the other hand a low rise hospital with an extended plan form and/or large floor areas on each storey should not require additional stairways since the occupants should be able to distance themselves from the seat of a fire both in actual distance and by intervening and adequate compartmentation and sub-compartmentation.

18.7 The table below is intended as a guide in assessing the possible need for additional escape stairways in those hospital projects where the plan form is compact and the storey areas are small in relation to the number of patients accommodated. The table is not definitive since other factors will have to be taken into account, such as the number of storeys containing patient accommodation, the type of patient accommodated on each storey, the adequacy of the compartmentation and sub-compartmentation, whether or not bed escape lifts are provided, the fire evacuation strategy etc. The table has been prepared on the basis that one stairway has been rendered unusable due to smoke logging. The table is inclusive of the minimum number of escape stairways recommended in paragraph 18.5.

Column 1 Number of Patient Beds on any one upper storey	Column 2 Number of Escape Stairways
1–100	2
101–200	3
201–300	4
301–400	5

For Nucleus projects see paragraphs 2.6 to 2.8

18.8 The minimum number of escape stairways recommended in paragraph 18.5 and any additional escape stairways assessed as being necessary from the table in paragraph 18.7 should be sited in accordance with Chapter

16 for hospitals and hospital extensions with hospital streets and paragraphs 8.13, 8.14 and 8.25b. for hospital extensions without hospital streets.

18.9 The table below is an example of the use of the table in paragraph 18.7. It does not take account of all the factors mentioned in that paragraph which could have a bearing on the final assessment of the number of additional stairways which may be required.

4th floor	– no patient beds	–2 stairways
3rd floor	– 60 patient beds	–2 stairways
2nd floor	– 200 patient beds	–3 stairways
1st floor	– 80 patient beds	–3 stairways

Although the first floor only requires two stairways, according to the table in paragraph 18.7, the three stairways required for the second floor must descend to ground level and should be made available for the occupants of the first floor.

18.10 Escape stairways should be remote from each other so that in the event of fire at least one stairway is available for evacuation of the occupants.

Stairway Design

18.11 Every escape stairway should:

a. be fully enclosed within a protected shaft to meet the recommendations of Approved Document B2/3/4. Glazing is not recommended in the enclosing structure of protected shafts except in doors and external walls, and

b. be entered from a protected lobby or from a circulation space (see paragraphs 18.20 to 18.27) or hospital street/main communication route, and

c. contain a final exit or lead directly to a final exit by way of a protected escape route (see paragraph 18.16) or discharge directly into a ground level hospital street containing final exits (see paragraphs 16.10 to 16.18), and

d. have fire resisting doors fitted with automatic self closing devices in accordance with the guidance in Approved Document B2/3/4, except that electro magnetic and electro mechanical or any other hold open device is not acceptable. The doors should open in the direction of escape and should not encroach upon the minimum width of landing required for means of escape from floors above and minimum width of hospital street where the stairway discharges into a hospital street, and

e. be reached independently from any point on a storey by way of circulation spaces, including protected lobbies and hospital streets if provided.

18.12 All stairways, except accommodation stairways, should terminate at the storey level from which access to external ground level can be attained. External ground level in relation to the lowest level (ie stairways which serve upper storeys) or highest level (ie stairways which serve basement storeys) of a stairway is the level from which a final exit(s) is available to users of the stairway whether or not:

a. the final exit is contained within the stairway enclosure, or

b. the final exit is reached by way of a protected escape route leading from the stairway enclosure, or

c. by way of a hospital street containing final exits located in accordance with Chapter 16.

Many hospitals are built on sloping sites and it is often impractical or impossible to locate all final exits on one particular storey. In such cases stairways, whether serving upper or basement storeys, may terminate at different external ground levels provided that the recommendations of this Chapter and of paragraphs 17.42 to 17.55 inclusive are observed and the recommendations of Chapter 19 are discussed and agreed with the local fire authority.

18.13 External areas at basement level with escape stairways or ladders up to ground level should not be provided for patient or staff escape except operating and maintenance staff.

18.14 If one or more walls of the stairway enclosure are external walls a smoke outlet having a clear openable area of one square metre should be provided at each storey level. If all walls of the stairway enclosure are internal walls a single outlet having a clear openable area of one square metre should be provided at the head of the stairway enclosure which can be opened either manually or automatically.

18.15 Access to a stairway enclosure through any other stairway enclosure is not recommended.

Protected escape route

18.16 An escape route from the foot (or head in the case of a stairway serving basement accommodation) of an escape stairway to the final exit (termed a 'protected escape route' for the purpose of this HTM only) should be protected by fire resisting construction to the same standard as the protected shaft enclosing the stairway. No accommodation should open directly into a ground level protected escape route except accommodation accepted for protected shafts in Approved Document B2/3/4. Any access between a ground level escape route and the ground floor should be protected by fire resisting doors to the same standard of fire resistance as the enclosing structure to the escape route and such doors, when opened, should not obstruct the escape route width. Any access between the ground floor and escape route should be only by way of a circulation space or protected lobby approached by a circulation space.

Mattress evacuation

18.17 It is essential that every escape stairway serving patient accommodation and any stairway which could be used by patients in an emergency fire situation is designed to permit evacuation of patients on mattresses. Each flight of the stairway should be wide enough to accommodate the width of the mattress. The landings should be of width to enable mattress evacuation. The following table gives various stairway widths and associated landing widths and

STAIR WIDTH	MIN LANDING WIDTH	MIN LANDING DEPTH	
1100	2800	1950	allows mattress evacuation only (ie no pedestrian passing).
1200	2800	1925	
1300	2800	1850	allows mattress evacuation and restricted ambulant passing.
1400	3000	1750	
1500	3200	1550	
1600	3400	1450	allows mattress evacuation and ambulent passing.
1800	3800	1350	

depths all of which will allow mattress evacuation but vary in their capacity to enable pedestrian passing when the stairway is being used for mattress evacuation. The dimensions refer to a clear width between the balusters and wall face, including the wall face below any wall mounted handrail. NB Reference should be made to Approved Document K1/2/3, for the minimum dimensions of non-mattress evacuation Institutional stairways and the method of measuring the widths of flights and landings. Irrespective of the recommended minimum height of handrails contained in Approved Document K1/2/3 the architect should consider the safety aspect of stairway wells. The graph on page 43 enables the architect to design stairway widths and associated landings other than those included in the table above. Provided that the doors into the stairway and the first flight of the stairway on the highest storey from which mattress evacuation is required are in line, the landing depth at that storey level may be reduced to 1 metre irrespective of the stairway width. If the stairway serves storeys above the highest storey from which mattress evacuation is required any reduction in landing depth should not be less than the required minimum for means of escape from such storeys (see paragraph 18.18). At stairway exit level the distance from the lowest riser to the doors out of the stairway may be reduced to 1 metre.

18.18 Stairway doors should not encroach on minimum landing widths and depths when opened.

18.19 Except for the width and depth of landings and flights for mattress evacuation stairways, all stairways should be designed in accordance with Approved Document K1/2/3, except that the riser height should not exceed 170 mm on any stairway which will or could be used by patients.

Protected lobbies

Location

Hospitals with one or more floors 18 metres or more above ground level

18.20 All protected shafts used by persons and/or for the transit of linen, supplies, food, medical records, refuse and/or other materials and equipment should be provided with protected lobbies at each level they serve with the exceptions listed in paragraph 18.21.

18.21 Protected lobbies are not required to protected shafts directly serving hospital streets provided that the protected shaft contains:

a. a stairway only, or

b. a lift or lifts only, or

c. a stairway and a lift or lifts only, or

d. mechanical and electrical services only and the protected shaft is designed in accordance with paragraph 16.20

and the hospital street is designed in accordance with Chapter 16.

The exceptions listed in this paragraph do not preclude the inclusion of sanitary accommodation within the protected lobby.

18.22 If, at any level, a protected shaft serving mainly hospital streets directly serves accommodation a protected lobby should be provided at that level only.

Hospitals with no floor 18 metres or more above ground level

18.23 Protected lobbies should be provided at each and every storey level to a protected shaft containing:

a. a stairway which serves a storey containing a ward or wards, or

b. a lift or lifts, or

c. a stairway and a lift or lifts, or

d. a stairway serving basement accommodation, or

e. a refuse chute (see paragraph 18.30), or

f. a dirty linen chute (see paragraph 18.30), or

g. a hoist or hoists

except protected shafts directly serving hospital streets which meet the recommendations of paragraph 18.21.

18.24 If, at any level, a protected shaft serving mainly hospital streets directly serves accommodation a protected lobby should be provided at that level only. This recommendation does not apply to protected shafts containing only mechanical and electrical services.

18.25 If, at any level, a protected shaft serves a compartment which contains a high fire load/high fire risk area a protected lobby should be provided at that level only, unless required at all levels to meet the recommendations

STAIRCASES Ratio of stair width to minimum landing depth for mattress evacuation

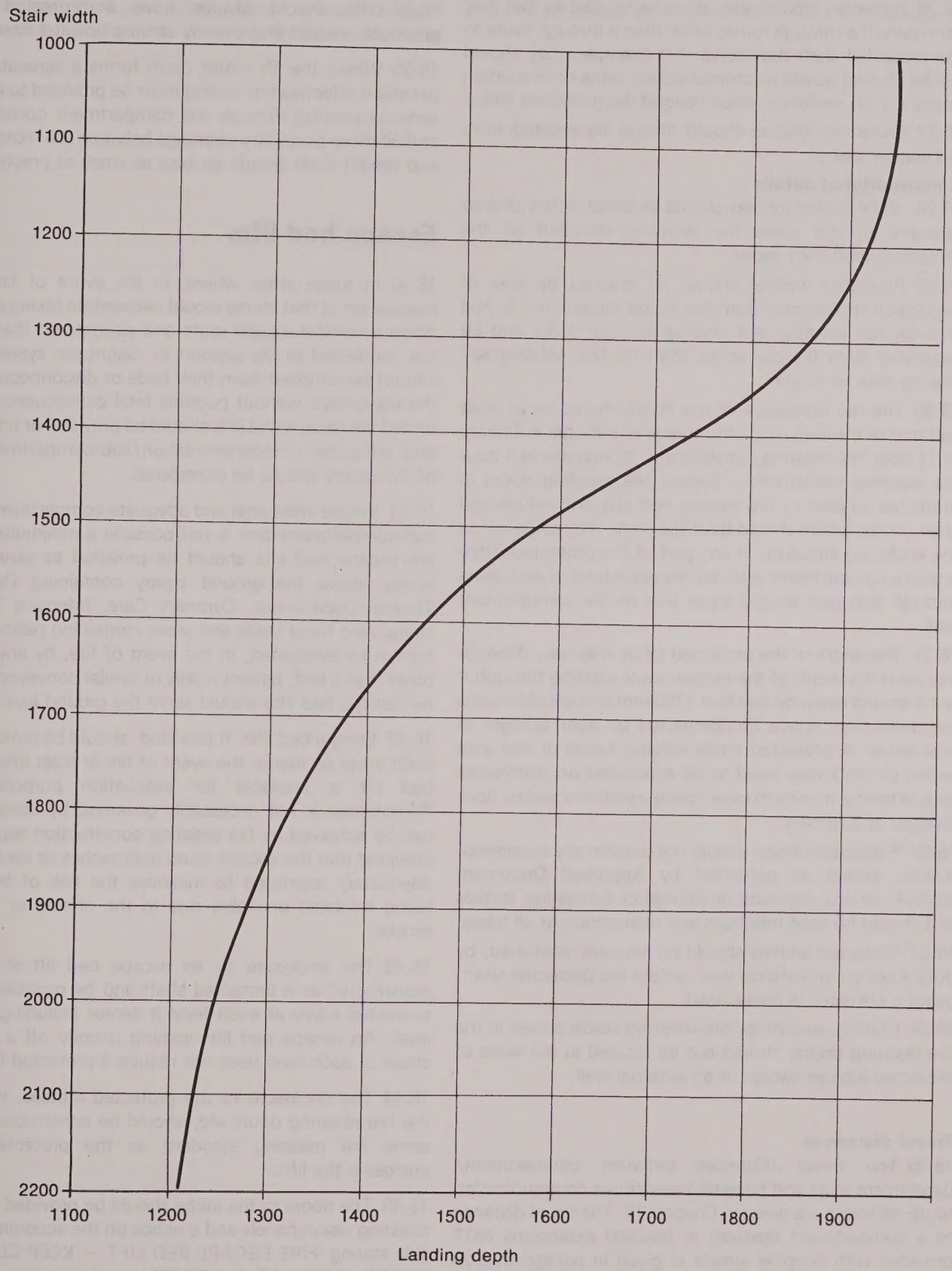

of paragraph 18.23. This recommendation does not apply to protected shafts containing only mechanical and electrical services.

All hospitals

18.26 Protected lobbies should not be located so that they form part of a through route, other than a through route to the protected shaft they serve. For example, they should not be located across a communication route or circulation space if such routes continue beyond the protected lobby.

18.27 Protected lobbies should always be entered from circulation spaces.

Constructional details

18.28 All protected lobbies should be constructed of solid masonry to the same fire resisting standard as the protected shaft they serve.

18.29 Protected lobbies should be entered by way of circulation spaces only from the accommodation side and through fire resisting self closing door or doors and be separated from the protected shaft by fire resisting self closing door or doors.

18.30 The fire resistance of the doors should be at least half that of the enclosing structure ie 60 minutes in 2 hours or 1½ hour fire resisting construction, 30 minutes in 1 hour fire resisting construction. Except fire resisting doors in protected lobbies to fire escape bed lifts and refuse and linen chutes which should have the same fire resistance as the enclosing structure. If any part of the protected lobby is also a compartment wall the fire resistance of any doors through that part should equal that of the compartment wall.

18.31 The width of the protected lobby may vary depending upon the width of the escape route passing through it but it should never be less that 1150 mm and should have a minimum clear space (unobstructed by door swings) of one metre. A protected lobby serving wards or any area where patients may need to be evacuated on mattresses should have a minimum clear space (unobstructed by door swings) of 3 metres.

18.32 Protected lobbies should not contain any accommodation, except as permitted by Approved Document B2/3/4, or any furniture or fittings or furnishing textiles and should be kept free from any obstruction at all times.

18.33 Protected lobbies should be naturally ventilated, by duct if not on an external wall, unless the protected shaft, being a stairway, is pressurised.

18.34 Glazing, except for fire resisting vision panels in the fire resisting doors, should not be located in the walls of protected lobbies except in an external wall.

Travel distances

18.35 The travel distances between compartment/department exits and hospital street/main communication route stairways are given in Chapter 16. The travel distance to a compartment stairway in hospital extensions NOT provided with hospital streets is given in paragraph 8.25 b.ii.

18.36 See paragraph 11.8 for the method of measuring the 45 metre travel distance within a stairway.

Lifts

18.37 Lifts should be enclosed within protected shafts to the recommendations of Approved Document B2/3/4.

18.38 Lifts should always have a protected lobby approach, except lifts directly serving hospital streets.

18.39 Where the lift motor room forms a separate compartment effective fire sealing must be provided to all fixed services passing through the compartment construction and all other necessary openings between the motor room and the lift shaft should be kept as small as practicable.

Escape bed lifts

18.40 In those areas where, in the event of fire, final evacuation of that storey would necessitate taking patients down a vertical escape route and patients on that storey are connected to life support or diagnostic systems and cannot be removed from their beds or disconnected from the equipment without possible fatal consequences, protected fire escape bed lifts should be provided or additional and adequate compartmentation/sub-compartmentation of the storey should be considered.

18.41 Where additional and adequate compartmentation/sub-compartmentation is not possible a minimum of two fire escape bed lifts should be provided to serve every storey above the ground storey containing Operating Theatre Department, Coronary Care, Intensive Therapy Units, Neo Natal Units and areas containing patients who cannot be evacuated, in the event of fire, by any means other than a bed, patient trolley or similar conveyance. The fire escape bed lifts should serve the ground level storey.

18.42 Escape bed lifts, if provided, should be remote from each other so that in the event of fire at least one escape bed lift is available for evacuation purposes. NB Remoteness is not necessarily governed by distance but can be achieved by fire resisting construction separation, provided that the escape route approaches to each lift are adequately separated to minimise the risk of both lifts being rendered unusable due to the effects of fire and smoke.

18.43 The enclosure to an escape bed lift should be constructed as a protected shaft and be provided with a protected lobby at each level it serves including ground level. An escape bed lift opening directly off a hospital street at each level does not require a protected lobby.

18.44 The enclosure to the protected lobbies, including the fire resisting doors etc, should be constructed to the same fire resisting standard as the protected shaft enclosing the lifts.

18.45 The doors to the lobby should be provided with fire resisting vision panels and a notice on the accommodation side stating 'FIRE ESCAPE BED LIFT — KEEP CLEAR OF OBSTRUCTION AT ALL TIMES'.

18.46 The protected lobby should be of sufficient size to hold a minimum of two beds, attendant staff and special

equipment and any necessary additional floor space to permit manoeuvering of the beds within the lobby.

18.47 The escape route at ground level should be protected to the same standard as escape stairways. Escape bed lifts and their protected lobbies should be kept independent from all other lifts and stairways and should not be used as an escape route other than for beds in the event of fire. They may be used during the every day running of the hospital.

18.48 The engineering services requirements for escape bed lifts are contained in the relevant Fire Practice Note 3.

19 Fire Brigade access — stairways and fire lifts

Firefighting stairways

19.1 Large hospitals contain many stairways to meet the user needs and whilst the fire brigade will have the option of reaching the upper storeys by using any one of the escape stairways convenient to them, the stairways will not necessarily be located in positions acceptable for gaining quick entry to upper storeys (see paragraph 5.2).

19.2 It is therefore essential that at least two escape stairways are located so that they can be entered at ground level directly from a suitable access for fire appliances or from a protected lobby which communicates directly with a suitable access for fire fighting appliances.

19.3 The travel distance from the final exit at ground floor level or the fire brigade access level to the stairway enclosure, or the protected lobby to the stairway enclosure, should not exceed 18 metres and should be designed as a protected escape route (see paragraph 18.16).

19.4 Firefighting stairways should be designed in accordance with the provisions of BS5588: Part 5.

Firefighting lifts

19.5 Firefighting lifts, including associated firefighting lobbies and firefighting stairways, should be designed in accordance with the provisions of BS5588: Part 5.

20 Fire resisting doorsets

General

20.1 Compartments and sub-compartments are designed to retard the spread of, or contain, fire and smoke. The integrity of the compartments and sub-compartments is of paramount importance to the safety of hospital occupants and therefore any door openings in these walls should be fitted with doors providing any necessary fire resistance.

20.2 Fire resisting doors serve their purpose of containing fire and smoke effectively only when they remain in a closed position. To ensure this, Approved Document B2/3/4 recommends that such doors are fitted with self closing devices.

20.3 The performance requirements of fire resisting doors may make them heavy and self closing. The force required to open them against the force of the self closing device and their sudden return to a closed position often create difficulties for negotiating wheelchairs, trolleys, stretchers, beds and patients with walking aids.

20.4 In some areas the movement of staff and patients is of such frequency and urgency that closed fire doors might be regarded as a hindrance. This is especially so if fire doors are located in positions unacceptable to the users since closed doors may prevent the necessary visual and auditory contact essential for good nursing care of patients. It is therefore essential that fire doors are located so that the users will have no cause to wedge them open.

20.5 If it is necessary both to provide a fire resisting door and to keep it open, this can be achieved by providing an electro-magnetic or electro-mechanical device (see paragraph 20.16).

Fire resisting doorsets

20.6 Fire resisting doorsets should conform to the recommendations of Approved Document B2/3/4 and should be provided in door openings in compartment walls, sub-compartment walls, protected shafts, protected lobbies and to rooms, spaces or areas which are itemised in Chapters 13 and 14.

20.7 All fire resisting doorsets including any glazing must be of a design and construction which when tested in accordance with BS476: Part 8 achieve a standard of:

½ hour fire resisting doorsets — 30 (ie 30 minutes integrity)

1 hour fire resisting doorsets — 60 (ie 60 minutes integrity)

NB: Any subsequent alteration, omission or addition to a door as tested, whether this be at design stage, construction stage or after completion of the building could vitiate the fire test rating and reduce or nullify the door's effectiveness in the event of fire. In all instances of proposed change an assessment should be obtained from an accredited testing station.

20.8 All fire resisting doors, including each leaf of double doors, should be provided with an identification disc. The disc should be 45mm diameter, with brown background and white engraved lettering denoting the fire resisting standard of the doorset, eg FR30, FR60. The disc should be positioned on each face of each leaf at the top of the hanging stile.

20.9 Fire doors on escape routes should be side hung or pivoted. Sliding doors, automatic doors, revolving doors, turnstiles and shutters (except shutters operated by fusible link and complying with the recommendations of Approved Document B2/3/4) are not acceptable for escape routes and should not be used.

20.10 Door swings should not obstruct the circulation space or escape route design width. Doors to cupboards, switchgear cupboards etc, which are normally kept shut, may open into the escape route for a short period during their use but it is recommended that such doors open through a nominal 180 degrees to avoid obstruction to the escape route when open.

20.11 In all cases where fire resisting doors are located across an escape route providing alternative means of escape the doors should be double swing. In all cases where fire resisting doors are located across an escape route providing a single direction of escape the doors can be single swing but should open in the direction of escape.

20.12 Fire resisting doors, or any door, to rooms, spaces or areas containing 31 people or more should open outwards from the room.

20.13 Fire resisting doors and other doors located across escape routes should have a glazed upper observation panel. Observation panels in doors to rooms are at the client's discretion, except doors to inner rooms — see paragraph 17.6. Consideration should be given to the provision of a lower glazed observation panel in geriatric and paediatric wards and in those areas where patients may have difficulty in seeing through an upper observation panel only, for example, patients restricted to wheelchairs. (See paragraph 11.42).

20.14 Fire shutters, smoke shutters and transfer grilles should not be fitted in fire resisting doors.

Automatic self closing devices

20.15 All fire resisting doors should be provided with automatic self closing devices except fire resisting doors, mentioned in Chapters 13 and 14, specifically excluded from such a requirement.

Door hold open devices

20.16 If, in the opinion of the client, any fire resisting door fitted with the required automatic self closing device is likely to be a hindrance or hazard to staff or patients or both then such doors, except those to stairways, can be provided with an electro mechanical or electro magnetic device which will allow the door to be held open by it. However, any door held open by such a device should close automatically upon the occurrence of each or any one of the following:

a. detection of smoke by automatic apparatus (ie smoke detector) suitable in nature, quality and location, and

b. manual operation of a switch fitted in a suitable position, and

c. failure of electricity supply to the device, apparatus or switch, and

d. operation of the fire alarm system.

NB: All the above four recommendations a. to d. should be provided for every hold open device installed.

20.17 It is recommended that all fire resisting doors across communication routes, hospital streets and main circulation spaces, except doors into stairways, should be fitted with electro mechanical or electro magnetic hold open devices.

20.18 Upon the operation of any manual call point or automatic smoke or heat detector all fire resisting doors, held open by electro-mechanical or electro-magnetic devices, within and forming part of the enclosure of the fire alarm zone in which the call point or automatic detector has operated should close. The recommendations in paragraph 20.16b. and c. should also be provided. Fire alarm zones are defined in HTM 82.

20.19 Hold open devices should not be fitted to automatic self closing fire resisting doors into fire escape stairways.

20.20 In certain circumstances neither the automatic self closing device nor the hold open device will be acceptable to the client; the former for reasons previously stated and the latter due to the possibility of draughts, lack of privacy etc. In these instances it is acceptable to install an automatic self closing device which allows the door to swing freely during normal everyday running of the hospital but which on the occurrence of any of the four items a. to d. mentioned in paragraph 20.16 above releases an arm which closes the door automatically or, the door being already closed, holds it closed.

Panic bars

20.21 The installation of panic bars in patient areas, and especially in areas occupied or attended by elderly persons, should be avoided. A patient could mistake the panic bar for a grab or hand rail or stumble against it, causing the door to open with possible injury to the patient.

Location for fire resisting doorsets

20.22 The following doorsets should always be fire resisting:

a. doorsets in compartment walls;

b. doorsets in sub-compartment walls;

c. doorsets in protected shafts;

d. doorsets in fire resisting construction other than a., b. and c. above;

e. doorsets into protected lobbies;

f. doorsets across hospital streets dividing departments/compartment entrances from escape stairways, lifts, ramps or final exits;

g. doorsets into fire hazard rooms or areas;

h. doorsets in enclosed escape routes across flat roofs;

i. doorsets in non-acute geriatric and non-acute mental illness ward bedrooms located in fire resisting construction.

NB: Access panels in fire resisting construction should be constructed to the same standard of fire resistance.

21 Active fire precautions

21.1 The concept of active fire precautions covers the detection, warning and control of fire. This includes:

a. fire alarm and detection systems, including both manual and automatic detection, and communication with the fire brigade;

b. first aid fire fighting equipment including hose reels, portable extinguishers and fire blankets;

c. fixed fire fighting equipment including sprinklers, foam inlets and gas flooding systems;

d. ancillary matters including escape lighting.

Fire alarm and detection systems

21.2 For a building to fully comply with this guidance, the fire alarm and detection system should be designed, installed and maintained in accordance with the recommendations given in HTM 82 — Fire Alarm and Detection Systems.

First aid fire fighting equipment

21.3 Different classes of fire are defined in BS4547 (EN2). The following is a brief summary:

Class A Fires	involving solid materials, usually of an organic nature in which combustion normally takes place with the formation of glowing embers.
Class B Fires	involving liquids.
Class C Fires	involving gases.
Class D Fires	involving metals.

It is essential to ensure that first aid fire fighting equipment is suitable for the fire risk involved. In most parts of the hospital, particularly patient areas the fire is likely to be Class A and water is the most practicable medium available.

21.4 Generally hose reels or portable fire extinguishers should be provided to cover all areas of the hospital. In certain areas where there is a special fire risk, such as flammable liquids or electrical equipment, water will be an unsuitable medium, extinguishers of an appropriate type should be installed. Guidance is given below.

Hose reels

21.5 Hose reel installations should conform to the relevant section of BS5306: Part 1. Hose reels should be permanently connected to an adequate water supply and located in an accessible and conspicuous position. The distribution of hose reels should be such that with not more than 30 metres of hose, run out fully, every area to be protected can be reached. An allowance for the throw of water from the nozzle may be made when calculating the number and length of hoses required. This allowance is 6m in a straight line from the nozzle; it may only be applied where there are no obstructions to the water jet.

Portable fire extinguishers

21.6 Portable water fire extinguishers should be provided to cover those parts of a hospital having a Class A fire risk (paragraph 21.3) and not covered by hose reels.

21.7 Suitable portable fire extinguishers should be provided to cover all areas with a fire risk other than Class A.

21.8 General recommendations for the provision and distribution of fire extinguishers is given in BS5306: Part 3. For general use one 9 litre capacity water type extinguisher should be provided for every 200 sq metres or part thereof.

21.9 The table on page 50 indicates the types of extinguisher available and their suitability for the various fire risks. All extinguishers should conform to BS5423.

21.10 In special risk areas, eg laboratories, the local fire authority and user should be consulted to assess the fire risk. Sufficient extinguishers of the correct type should be installed consistent with that risk, and sited appropriately.

21.11 Portable fire extinguishers should be inspected and maintained in accordance with the recommendations of BS5306: Part 3.

21.12 Fire blankets may be used in addition to the provision of extinguishers or hose reels except in those special fire risk areas where they would be unsuitable.

Fixed fire extinguishing equipment

21.13 Fixed fire extinguishing equipment may be used in some instances in place of hose reels. The equipment will usually be automatically operated upon the detection of a fire. The systems should be connected to the main fire alarm system so that in the event of operation an alarm is initiated. All systems should have a manual over-ride operation.

21.14 Installations using water are the most suitable for general protection while other extinguishing mediums are available for special risk such as bulk oil stores and HV electrical installations. Some extinguishing mediums for example carbon dioxide, cannot be discharged into occupied areas. This type of system will require a 'lock off' facility while the area protected by the system is occupied.

Extinguisher Type	Class of Fire		Electrical Risk
	A	B	
Water			
- gas cartridge	•		
- stored pressure	•		
Powder			
- gas cartridge		•	•
- stored pressure		•	•
Foam			
- gas cartridge		•	
- stored pressure		•	
Halon* (Inhibiting Gas)			
- stored pressure type 1301		•	•
- stored pressure type 1211		•	•
Carbon Dioxide			
- stored pressure		•	•

* Care should be taken if used in enclosed spaces as some of the products of combustion are toxic, however they are suitable for a wide range of portable extinguisher applications.

21.15 Within hospitals fixed fire extinguishing systems should be used in areas of high fire load or where the loss of a particular facility will lead to severe disruption of the hospital's operation.

21.16 The fire authority should be consulted regarding the specific need of fixed fire fighting equipment and specialist advice sought for its design.

Sprinklers

21.17 Sprinklers may be used in areas of high fire load for example, in stores, with a total volume exceeding 1400 cu metres. Sprinklers should also be installed in under building and underground car parks.

21.18 The installation should conform to the relevant clauses of BS5306: Part 2.

Total and partial flooding systems

21.19 Traditionally carbon dioxide total flooding systems have been used to protect HV switchgear installations and computer suites and foam for under-building oil tanks. With the introduction of new extinguishing mediums, particularly the inhibiting Halon gas systems, partial flooding systems are now practicable.

21.20 In the case of Halon 1301 total flooding systems are now permitted where there are occupants but with certain safeguards such as percentage discharge and pre-warning. Also available are local application systems which protect small but high risk fire sources, such as fat fryers.

21.21 Systems should be designed in accordance with the appropriate part of BS5306:

Part 4 — Carbon Dioxide Systems.

Part 5 — Halon Systems.

Part 6 — Foam Systems.

Water supplies, hydrant systems, risers and foam inlets

21.22 The specific requirements for hydrant systems and foam inlets are given in BS5306: Part 1.

Hydrant systems

21.23 Most large hospital complexes will require external fire hydrants within their boundaries. Where local authority hydrants are available within the distances given below, smaller premises may not require fire hydrants.

21.24 The location of external fire hydrants needs to be planned with due regard to the layout of the premises and their accessibility for fire brigade appliances. Fire hydrants should be positioned to suit the inlet connections to any dry riser provided.

21.25 Fire hydrants should be positioned not less than 6m and not more than 70m from any entrance to a hospital. They should not be more than 150m apart and preferably be adjacent to fire brigade access roads or hardstandings.

Wet and dry risers

21.26 Dry risers are required to buildings in which any floor level is between 18m and 60m above ground level. In multi-storey deep planned designs it is recommended that a dry riser system should be installed irrespective of the hospital height. Wet risers are required in hospitals with any floor level greater than 60m above ground level.

21.27 BS5306: Part 1 recommends the number and location of wet or dry risers should be such that:

a. one is provided for every 900 sq m of the floor area of each storey or any part thereof, other than the ground floor;

b. rising mains are not more than 60m apart in a horizontal direction;

c. no part of a floor is more than 60m from a landing valve: the distance to be measured along a route suitable for hoses and may include small changes in level.

21.28 In hospitals the 60m recommendation given in c. above may be relaxed to 64m provided that the landing valves are sited outside compartment entrances and there are no changes in level.

Foam inlets

21.29 These will be necessary where oil fired boilers and oil storage chambers are within the main hospital with no direct fire fighting access from open air.

Escape lighting

21.30 Escape lighting should be installed in accordance with BS5266: Part 1.

22 Mechanical and electrical services

22.1 Mechanical and Electrical Services should be installed in accordance with the recommendations contained in this HTM, other HTM's relevant to a particular service and the Practice Notes on engineering aspects of fire safety issued in conjunction with this HTM. See paragraphs 15.7 to 15.12 for electrical distribution.

Mechanical ventilation and air conditioning systems

22.2 Ventilation systems should not be common to both patient areas and hazardous areas or situations and should be designed and installed to reduce the risk of their spreading fire and smoke throughout the hospital.

22.3 Ventilation ductwork should be non-combustible.

22.4 Fresh air intakes must be sited to avoid the possibility of the intake of smoke and toxic gases as well as other effluents.

Fire shutters

22.5 In the event of a fire large quantities of smoke and toxic gases can be given off. DHSS and the Welsh Office consider that if a mechanical ventilation or air conditioning system is provided and the system is turned off upon the outbreak of fire, there is a danger that smoke and toxic gases could be forced through the ductwork into rooms and areas remote from the fire.

22.6 It is therefore recommended that mechanical ventilation and air conditioning systems are kept running in the event of a fire, at least until such time as the occupants within the sub-compartment containing the fire have been evacuated, if this is necessary, or until the fire shutters have closed due to the temperature within the trunking. The fusible link nominal operating temperature will normally be 68°C. Where this recommendation is adopted automatic fire shutters activated by heat detectors or smoke detectors or activation of the alarm system should not be fitted in air conditioning or mechanical ventilation ductwork.

22.7 It is essential that the extract system discharges directly to the open air in the event of fire. If a full or partial recirculation system is installed then, on the activation of the fire alarm system, the extract ventilation should immediately be diverted to discharge to the open air. Optical smoke detectors within the ductwork, as recommended in Approved Document B2/3/4, will not be necessary where trigger devices are installed in the hospital in accordance with the recommendations of HTM 82.

22.8 It is essential that all fire shutters are installed so that they maintain their integrity against the passage of fire for the required period of fire resistance. It is also essential that the required period of fire resistance between the fire shutter and the construction in which it is located, whether this be a wall or a ceiling, is also maintained. A fire shutter must be adequately fixed into or to the construction it is protecting. A fire shutter which is supported only by the ductwork in which it occurs or by timber battens, frames or other methods which do not meet the required fire resistance is not acceptable since, in the event of fire, the ducting and/or the fixings could collapse taking the fire shutter with it. Fire shutters installed in half hour fire resisting ceilings should be properly supported ie either by the ceiling or from the structural soffit. In the ceiling situation it is also essential to ensure that the integrity of the fire resisting ceiling is maintained. It is not acceptable to form an opening, install a diffuser or grille and fit a fire shutter above the diffuser or grille if the gap between the ceiling opening and the fire shutter does not achieve a half hour fire resisting standard. (See CP 413, Appendix A, paragraph A4.4).

Location of fire shutters

22.9 The recommendations for the type of shutters to be installed in the ventilation/air conditioning trunking are as follows:

Compartment walls and floors

22.10 Automatic steel fire shutters on fusible links.

Sub-compartment walls and other fire resisting construction

22.11 Automatic steel fire shutters on fusible links. An automatic steel fire shutter need not be installed in a ventilation duct where it passes through a sub-compartment wall provided that:

a. the duct serves only one sub-compartment, and

b. the required fire resistance of the sub-compartment wall is no more than half hour, and

c. the ductwork has the same fire resistance for stability, and integrity, when tested in accordance with

BS476: Part 8, as the sub-compartment wall or walls through which it passes, and

d. the ductwork supports have the same fire resistance for stability only, when tested in accordance with BS476: Part 8, as the sub-compartment wall or walls through which the duct passes.

Fire hazard rooms

22.12 Automatic steel fire shutters on fusible links. See paragraph 22.17a.

22.13 Air conditioning and mechanical ventilation ducts should not pass through the fire resisting enclosure of a fire hazard room, if unavoidable see paragraph 22.17b.

22.14 For the purpose of this recommendation non-acute geriatric and non-acute mental illness ward bedrooms are not classified as fire hazard rooms (see paragraphs 22.15 and 22.16).

Non-acute geriatric and non-acute mental illness wards

22.15 Automatic steel fire shutters need not be fitted in ductwork passing through half hour fire resisting walls enclosing non-acute geriatric and non-acute mental illness bedrooms except compartment, sub-compartment, protecting structure and fire hazard room walls.

22.16 If the option in paragraph 13.2a., to terminate the bedroom enclosing walls at half hour fire resisting ceiling level, is adopted automatic steel fire shutters are not required to be fitted to any duct perforating the fire resisting ceiling. If, however, the geriatric or mental illness bedrooms are located on a storey immediately below a pitched roof and the option under paragraph 9.9, to terminate the sub-compartment walls at fire resisting ceiling level, is adopted automatic steel fire shutters should be provided to all ducts perforating the ceiling in accordance with paragraph 14.3c.

Fire hazard rooms and areas

22.17

a. Air conditioning and mechanical ventilation ducts should not pass through a fire hazard room if the ducts serve the first hazard room and other rooms beyond the fire hazard room. In such cases the fire hazard room should be served by spurs off the main air supply and extract ducts and the spurs should be provided with automatic steel fire shutters on fusible links where they terminate in the fire hazard room enclosure. In all instances the ductwork should be designed so that on activation of the fire shutters to the fire hazard room the mechanical ventilation to other rooms, served by the same main ducts, continues to function. (See paragraphs 22.5 and 22.6).

b. Any duct passing through the fire resisting enclosure of a fire hazard room or area which does not serve the fire hazard room or area but passes through and serves life risk areas should be enclosed in fire resisting construction in the fire hazard room or area only. The enclosure should be to the same standard of fire resistance as that required for the enclosure of the fire hazard room or area.

c. Transfer grilles should not be provided in the fire resisting construction unless fitted with automatic fire and smoke shutters activated by a heat or smoke detector located in the fire hazard room.

Cavity barriers

22.18 Half hour automatic steel fire shutters on fusible links should be provided OR the entire ventilation trunking should be constructed of mild steel not less than 0.7mm thick.

Transfer grilles

22.19 Transfer grilles should not be installed in compartment walls, compartment floors, sub-compartment walls, protected shafts. Transfer grilles should not be installed in fire resisting construction enclosing non-acute geriatric and non-acute mental illness ward bedrooms.

22.20 The installation of transfer grilles in fire resisting construction, other than fire resisting construction itemised in paragraph 22.19, should be avoided but if absolutely essential each transfer grille should always be fitted with an automatic steel fire shutter activated by the detection and fire alarm system. The fire shutter should be rated for fire to the required fire resistance of the construction in which it occurs and designed to minimise the passage of smoke and toxic gases.

22.21 Fire hazard rooms should always be provided with the relevant smoke and/or heat detectors.

22.22 Transfer grilles should never be installed in fire resisting doors nor should fire resisting doors be undercut.

22.23 The location of transfer grilles should be discussed with the local fire authority.

Fire stopping

22.24 Ducts and pipes passing through fire resisting construction should be fire stopped in accordance with Approved Document B2/3/4.

22.25 Ducts containing pipes and cables passing through fire resisting construction should be fire stopped over the entire free cross-sectional area of the duct. The fire stopping should give the same fire resistance as the construction through which the duct passes. This recommendation is not required in fire resisting enclosures to non-acute geriatric and non-acute mental illness ward bedrooms except as defined in paragraph 22.15 and 22.16.

Door hold open devices

22.26 Door hold open devices are permitted on any door fitted with an automatic self closer except doors into stairways. Doors to be fitted with hold open devices are

subject to agreement between the client and designers. See paragraphs 20.16 to 20.20 inclusive.

22.27 Upon the occurrence of each or any one of the items listed in paragraph 20.16a., b., c. and d. in a fire alarm zone, all fire resisting doors held open by electro-mechanical or electro-magnetic devices, within and forming part of the enclosure of the fire alarm zone, should close. Fire alarm zones are defined in HTM 82.

23 Fire drawings

23.1 In order that adequate precautions against a possible outbreak of fire can be provided, the fire risks of the whole project must be assessed at the design stage. The assessment must be based on the scheme as a whole and conclusions must be expressed on drawings for others to read, agree or comment. It is necessary therefore that fire drawings are prepared using nationally accepted symbols. A set of fire drawings should comprise a site and location plan, floor plan(s) of every storey, elevations and a detailed plan of every department or area. In the event of a fire the local Fire Brigade may find the set of drawings useful in formulating the strategy in approaching and dealing with the fire.

23.2 It is essential to label parts of a large hospital complex in such a manner that each part can easily be located by the Fire Brigade.

23.3. During the construction period of new hospitals variations to the structure and layout frequently occur. It is important that such alterations are considered in relation to the agreed fire drawings and that any alterations maintain the recommendations of this HTM.

23.4 It is important that a copy of the fire drawings, being a true record of the premises as built, is available on completion of the new hospital and is held by a person responsible for any future alterations to the premises. Any proposed alteration should be checked with the fire drawings and if such alteration vitiates the fire safety provision in any respect the alteration or alterations should be modified to ensure that the integrity of the fire safety provision is maintained in accordance with the recommendations of this HTM.

Site and location plan

23.5 Site plans should be drawn up to a small scale showing clearly:

a. the extent of the site and surrounding area;

b. the location of the building(s) on the site;

c. the location and type of buildings surrounding the site;

d. the entrance(s) to the site;

e. the roadway(s) for the Fire Brigade vehicles;

f. the entrance(s) to the hospital;

g. the location of hydrants;

h. the location and type of special hazards eg Boiler House, Kitchens, etc.

Floor plan of each storey

23.6 The floor plan of each storey should be prepared to a scale of not less than 1:200 and should show all the following, as relevant:

a. the outline of the building(s);

b. the entrances to the hospital;

c. compartment(s) and sub-compartment(s);

d. hospital street;

e. entrance to each compartment and sub-compartment;

f. circulation spaces within each compartment and sub-compartment;

g. location of escape stairways, ramps and lifts;

h. location of wet and dry risers.

Floor plan of each department

23.7 The department plans should be prepared to a scale of not less than 1:100 and preferably at a scale of 1:50 and should show all the following, as relevant:

a. the entrance to the department;

b. compartment and sub-compartment(s)

c. the circulation space within each compartment and sub-compartment;

d. entrances to compartment and each sub-compartment(s);

e. location of wet and dry risers;

f. location of hose reels;

g. location of fire fighting equipment;

h. gas and oil main controls;

i. electrical mains and sub-main controls;

j. ventilation plant and control switches;

k. position of fire-resisting doors;

l. location of special hazard areas;

m. the plan of the service voids showing cavity barriers;

n. location of the fire lifts and fire escape bed lifts.

23.8 The fire symbols shown on the following pages are based mainly on BS1635.

FIRE SYMBOLS (SEE B.S. 1635: 1970 AND B.S. 5499:1984 FOR SYMBOLS NOT LISTED)

SPACES AND MEANS OF ESCAPE

Entrance(s) to the site.

Fire brigade vehicle access.

Entrance(s) to the building(s).

1 HFR/CW

Fire resistant compartment wall (indicate degree 1 hour, 1½ hour etc) sub-compartment wall.

½ HFR/F

Fire resistant wall at compartment/sub-compartment junctions with external cladding.

Partitions, not fire resistant.

Escape route.

Protected escape route.

½ HFR/F

Fire enclosure (enclosing walls, ceiling, floors etc) (indicate degree: ½ hour, 1 hour, etc).

½ HFR/CB

Cavity barriers (indicate degree: ½ hour etc).

Exit horizontal: one way.

Exit horizontal two ways.

Exit downwards: (arrow in the direction of travel).

Exit upwards.

1:10

Ramp up.

1:10

Ramp down.

Stairs: arrow to indicate 'up' direction only.

600 x 600mm access panels to fire dampers in suspended ceiling. Exact location to be project decision depending on lighting and room layouts.

FIRE NOTICES/SIGNS

O O
75

Illuminated sign box 'Exit'; letter size in mm. Illuminated directional sign box 'To Fire Exit'; letter size in mm.

E
125

Sign 'Fire Exit'; letter size in mm.

E →
125

Sign 'To Fire Exit' with directional arrow, letter size in mm.

PB
75

Notice on doors 'Push Bar to open' letter size in mm.

N1

General Fire Procedure Notice.

N2

Staff fire notice.

N3

Notice on doors 'Keep shut when not in use'.

75
N4
←

Notice on doors 'Slide to Open' with arrow in direction of opening; letter size in mm.

75
N5

Notice on doors 'Fire Exit Keep Clear', letter size in mm.

75
N6

Notice on doors 'Fire Door keep Shut' letter size in mm.

75
N7

Notice on doors 'Door Secured in Open Position' letter size in mm.

75
N8

No combustible storage notice, letter size in mm.

N.B. Height of letters (in mm) on fire safety signs and notices to be ascertained from BS5499: Part 1: 1984.

FIRE PROTECTION

Fire resisting single leaf door, single swing.

Fire resisting single leaf door, double swing.

Fire resisting double leaf door, single swing.

Fire resisting double leaf door, double swing.

*See Fire Symbols - Doors for code on degree of fire resistance, ironmongery and fire closure devices.

Hose reel

DR — Rising main dry inlet

W — Hydrant outlet wall valve - Wet

D — Hydrant outlet wall valve - Dry

H — Hydrant ground

H — Hydrant post

Sprinkler head

S — Area covered by sprinklers.

F — Foam Inlet.

W — Portable fire extinguisher. Water (gas cartridge, stored pressure or soda acid).

DP — Portable fire extinguisher. Dry powder (gas cartridge or stored pressure).

F — Portable fire extinguisher. Foam (chemical, mech, gas cartridges, or mech. stored pressure).

C — Portable fire extinguisher. Chemical.

CO_2 — Portable fire extinguisher. Carbon Dioxide.

H — Portable fire extinguisher Halon (Vapourizing liquid) (stored pressure (CBM, BCF, BTM).

B — Fire Blanket.

WB — Water Bucket.

SB — Sand Bucket.

F — Fixed Automatic Foam Installation

CO_2 — Fixed Automatic CO_2 Installation

H — Fixed Automatic Halon Instruments

Electro magnetic door detente.

FIRE DETECTION AND WARNING

	Fire alarm call/points.
	Audible warning device.
	Automatic smoke detectors.
	Visual warning device.
IP	Fire alarm indicator panel.
	Telephone point, internal automatic.
	Flashing light/buzzer unit.
RAP	Repeat fire alarm indicator panel.
MAP	Main fire alarm indicator panel.
	Automatic heat detectors.
	Warbler.
	Manual fire alarm sounder.

EMERGENCY LIGHTING SYSTEM ESCAPE/SAFETY LIGHTING

B	Emergency light (self contained battery).
	Emergency light (central battery).
H	Emergency lighting handlamp.
G	Standby lighting. (Escape light could be supplied from this source under certain circumstances.) Standby lighting luminaire (fed off generator).

ABBREVIATIONS

*	Door, corridor, stairway or opening not forming part of means of escape.
SCD	Self closing device.
SC/A	Automatic release (electro magnetic door detente).
SL	Security lock.
K	Key in box.
FFF	Door free from fastening.
	Roller shutter door.
UO	Up and over door.
FRG 30	Fire resisting glazing (not less than 30 mins., fixed shut).
FRG 60	Fire resisting glazing (not less than 60 mins, fixed shut).
FRG/H	Fire Resisting Glazing High Level
VP	Vision Panel.
Grl	Guardrail balustrades or walls.
	Door(s) fitted with push bars.
FR	Fire resistance (indicate degree; ½, 1 etc).

FIRE SYMBOLS - DOORS

FR1 / AS/BG/K	1 hr FR door with electro magnetic detentes linked to fire alarm as well as smoke detectors and locked with BG bolts, key operated from both sides.
FR1 / D	1 hr FR door with delayed action closer
FR½ / D	½ hr FR door with delayed action closer.
FR½ / A	½ hr FR door with electro magnetic detentes linked to fire alarm system.
FR½ / A/BG/K	As above and locked with BG bolts. Key operated from both sides.
FR½ / NSC/L	½ hr FR door, not self-closing, with lock.
FR1 / BG/K	1 hr FR door double swing. Normally kept locked with BG bolts. Key operated from both sides.
FR½ / D/BG/K	½ hr FR door with delayed action self closer, and locked with BG bolts. Key operated from both sides.
S/S / S/M	Smoke stop doors normally in stand open position. Manually released by staff in case of fire/smoke spread. Self closing with one way opening restrictor which can be manually released to act as double swing in emergency.
FR1 / A	1 hr FR door with electro magnetic detentes linked to fire alarm system.
FR½ / NL	½ hr FR door with no lock
FR½ / CB	½ hr FR door in cavity barriers within the ceiling void. Exact location to be a project decision.
FR½ / D/1BG/K	½ hr. FR door with delayed action self-closer locked with BG bolt from inside face. Key operated from both sides
FR½ / L	½ hr FR door with lock
FR1 / 1BG	1 hr FR door with BG bolt from inside face only

FR½ / D/L	½ hr FR door with delayed action closer and lock.
S/S/D	Smoke stop doors normally in closed position with delayed action closer.
FR½	½ hr FR door with double action door closer with vision panels.
FR1 / BG	1 hr FR door with BG bolts.
FR1 / A/BG/K/S	1 hr FR door with electro magnetic detentes linked to fire alarm and with BG bolts. Key operated from both sides. Linked to security alarm.
FR1 / AS	As above without BG lock.
FR½ / AM	½ hr FR door with electro magnetic detentes linked to fire alarm and over ride switch.
FR½ / H/NSC	½ hr FR door below counter level with ½ hr FR glazed vertical sliding hatch above counter level, both not self-closing and with lock.
FR½ / RS/L	½ hr FR roller shutter with lock.
FR1 / AS/BG/K	1 hr FR door with electro magnetic detentes linked to fire alarm as well as smoke detectors and locked with BG bolts. Key operated from both sides.
FR1 / L	1 hr FR door with lock
FR1 / A/RL	½ hr FR roller shutter linked to fire alarm system.
FR1 / D/BG/K	1 hr FR door with delayed action self closer and locked with BG bolt from inside. Key operated from both sides.
FR½ / A/RL	½ hr FR roller shutter linked to fire alarm system
FE / 1	Fire exit door with BG bolt on inside face only.
FE / 2	As above but key operated from inside face only.

FE / 3	Fire exit door with panic bolt on inside face only.
S/S	Smoke stop door with overhead door closer.
S/S / A/S	Smoke stop door with electro magnetic detentes linked to fire alarm and smoke detector system
S/S / L	Smoke stop door with overhead door closer with lock.
FE / 4	Fire exit door with BG bolt on corridor face only, linked to security alarm.
FR1 / AS/BG/K1	1hr FR door with electro magnetic detentes linked to fire alarm as well as smoke detectors and locked with BG bolts. Key operated from A and E side only.
FR½ / 1BG/K1	½ hr FR door without self closer and locked with BG bolt. Key operated from X-ray side.
S/S / BG/K	Smoke stop doors (30/20 minutes FR) with BG bolts. Key operated from both sides.
FE2	Fire exit doors with BG bolt on inside face. Key operated from both sides.
FE4	Fire exit door. No lock
FR½ / A/L	½ hr FR door with electro magnetic detentes linked to fire alarm and with locks.
FR½ / S	½ hr FR sterilizer panel and door-set.
FR½ / CL	½ hr FR doors with cylinder lock;
FR½ / NSC/H	½ hr FR sliding shutters to hatch not self closing.
FR1 / COLD	1 hr FR door with lock by specialist

FR½ / SP	½ hr FR sliding door by lift specialists.
FR½ / AS	½ hr FR door with electro magnetic detentes linked to fire alarm as well as smoke detectors
FR2 / SL/F	2 hr FR sliding door on fusible link.
FR2 / BG/K	2 hr FR door normally kept locked with BG bolts. Key operated from both sides.
FR2 / L	2 hr FR door with lock
E / LOU	External Door with louvres
FR2	2 hr FR door

Appendix 1

Glossary of terms

Note

Certain terms used in this HTM and included in the following glossary of terms are relevant to this HTM only and may have a different meaning or interpretation when included or referred to in other guidance and statutory regulations. For example, the definition of 'basement storey' in this HTM is related to final exit level of an escape route whereas 'basement storey' in Approved Document B2/3/4 has a different interpretation and is related to structure and structural fire precautions.

Term	Definition
Access Room	A room which forms the only route of escape from an inner room into a circulation space.
Accommodation	
a. Accommodation	All areas of a hospital (ie all compartments, sub-compartments, uncompartmented and un-sub-compartmented storeys) except hospital street/main communications routes.
b. Patient accommodation	All areas containing patient beds (ward sub-compartments and compartments).
Accommodation stairway	A stairway which connects different levels within the same compartment only.
Alternative exit	One of two or more exits from within an enclosed area, each of which is separate from the other and is treated in accordance with paragraph 17.15.
Alternative means of escape	Structural means whereby more than one safe route is provided for persons to travel from any part of a building to a place of safety.
Basement storey	A storey from which direct escape at ground level to a place of safety outside the building is not possible except by ascending a stairway or ramp either inside or outside the building.
Cavity barrier	Construction provided to close a cavity against penetration of smoke or flame or provided within, a cavity to restrict movement of smoke or flame within the cavity; and includes construction provided for another purpose if such construction conforms with the criteria required of a cavity barrier.

Term	Definition
Ceiling void	A cavity between a structural floor and the suspended ceiling below provided for building services.
Circulation space	The communication route within a department giving access to the various rooms and areas, the department entrance or entrances and any necessary fire escape exits.
Compartment	Any part of a building which is separated from all other parts by one or more compartment walls or compartment floors or by both such walls and floors; and, if any part of the top storey of a building is within a compartment, that compartment shall also include any roof space above such part of the top storey.
Compartment floor	A floor which complies with Approved Document B2/3/4.
Compartment wall	A wall which complies with Approved Document B2/3/4.
Element of structure	a. any member forming part of the structural frame of a building or any other beam or column (not being any member forming part of a roof structure only); b. a floor, including a compartment floor, other than the lowest floor of a building; c. an external wall; d. a separating wall; e. a compartment wall; f. structure enclosing a protected shaft; g. a loadbearing wall or loadbearing part of a wall; h. a gallery.

Term	Definition
Escape route	A route by way of not more than one inner room, one access room and a doorway into a circulation space and thereafter only by way of circulation spaces including any stairway or ramp forming part thereof (excluding by means of a lift, (except escape bed lifts) escalator or doorway containing a revolving door, automatic door or turnstile) by which a person may reach a final exit. (See paragraphs 8.20 to 8.23 for exception).
Escape stairway	A stairway provided for means of escape.
Final exit	The terminal point of an escape route from a building at ground level.
Fire lift	A lift installed for normal purposes in a building but provided with a priority switch for Fire Brigade use.
Fire resistance	The ability of an element of building construction to withstand the effects of fire for a specified period of time without loss of its fire-separating or loadbearing function, or both.
Fire resisting	Having the ability to withstand the effects of fire for a specified period of time with no loss of its fire-separating or loadbearing function, or both.
Fire stop	A seal of non combustible material provided to close an imperfection of fit between elements, components or construction in a building so as to restrict penetration of smoke or flame through that imperfection.
Fire load	The total amount of combustible material expressed in heat units, or its equivalent weight of wood.
Flash-over	A stage in the development of a contained fire at which fire spreads rapidly to give large merged flames throughout the space. NOTE: As a scientific term 'flash-over' is applicable only to enclosed compartments.
Ground level storey Ground storey	A storey from which direct escape at ground level to a place of safety outside the building is possible without ascending or descending a stairway either inside or outside the building.

Term	Definition
	In those buildings where direct access to ground level outside the building is possible from different storeys (eg a building built into or against a sloping site) it is acceptable to locate final exits below the general ground level storey provided that the final exit gives direct access to ground level outside the building without having to ascend a stairway to reach a place of safety.
Health buildings	a. Health building means any building owned or occupied and managed by the National Health Service on behalf of the Secretary of State. This includes hospitals.
High fire load areas	Those rooms or areas of hospitals which contain large amounts of combustible materials and thereby constitute a fire load in excess of that normally found within parts of such buildings.
High fire risk areas	Areas which due to their function and/or content are more than usually susceptible to an out break of fire or rapid spread of smoke or fire.
High life risk areas	a. Areas in which persons may reside and are not all able to move unaided away from a fire, or b. undivided areas in which more than 50 people normally congregate.
Hospital street	The main route of ingress and egress for staff, patients, visitors, supplies and services and constructed as a compartment.
Inner room	A room from which escape is only possible by passing through another room (an access room).
Landing valve	A valve and outlet connection from a wet or dry riser.
Low life risk areas	a. Areas in which all occupants are ambulant and able to move unaided away from a fire, or b. undivided areas in which not more than 50 ambulant people would normally congregate.
Means of escape	Structural means whereby a safe route or routes is provided for persons to travel from any point in a building to a place of safety.
Occupant capacity	The number of persons which the room, sub-compartment, compartment, storey or entire building is capable of holding.

Term	Definition
Place of safety	A place in which persons are in no danger from fire and smoke, burning brands and collapsing buildings or parts of buildings.
Progressive horizontal evacuation	Evacuation of patients away from a fire into fire free adjoining compartments and/or sub-compatments on the same level.
Protected escape route	An escape route (qv) having an adequate degree of fire protection between an internal stairway and final exit.
Protected lobby	A fire resisting lobby provided to the entrance or opening into a protected shaft to separate the entrance or opening into the protected shaft from the accommodation it serves.
Protected shaft	A stairway, lift, escalator, chute, duct, or other shaft which enables persons, things or air to pass between different compartments and complies with the requirements of Approved Document B2/3/4.
Purpose group	As defined in Approved Document B2/3/4.
Solid masonry	Masonry wall construction which meets the standard of fire resistance required and which contains no cavities. Hollow masonry wall construction is not acceptable.
Stairway enclosure	A stairway in a building, physically separated (eg by walls) from the accommodation through which it passes.
Structural fire precautions	Those features in the layout and/or construction of a building which are intended to reduce the effects of a fire.
Sub-compartment	A part of a compartment separated from the remainder of the compartment by walls and doors having fire resistance of not less than half-an-hour or not less than half the fire resistance of the compartment walls whichever is the greater.
Travel distance	The distance to be travelled between two points in a building as defined in Chapters: 8, 9, 11, 15, 16, 17 and 18.
Unprotected area	As defined in Approved Document B2/3/4.
Ward	The accommodation and spaces for a group of patients normally the responsibility of a charge nurse/sister.

Appendix 2

FIRES IN DIFFERENT PARTS OF HOSPITALS

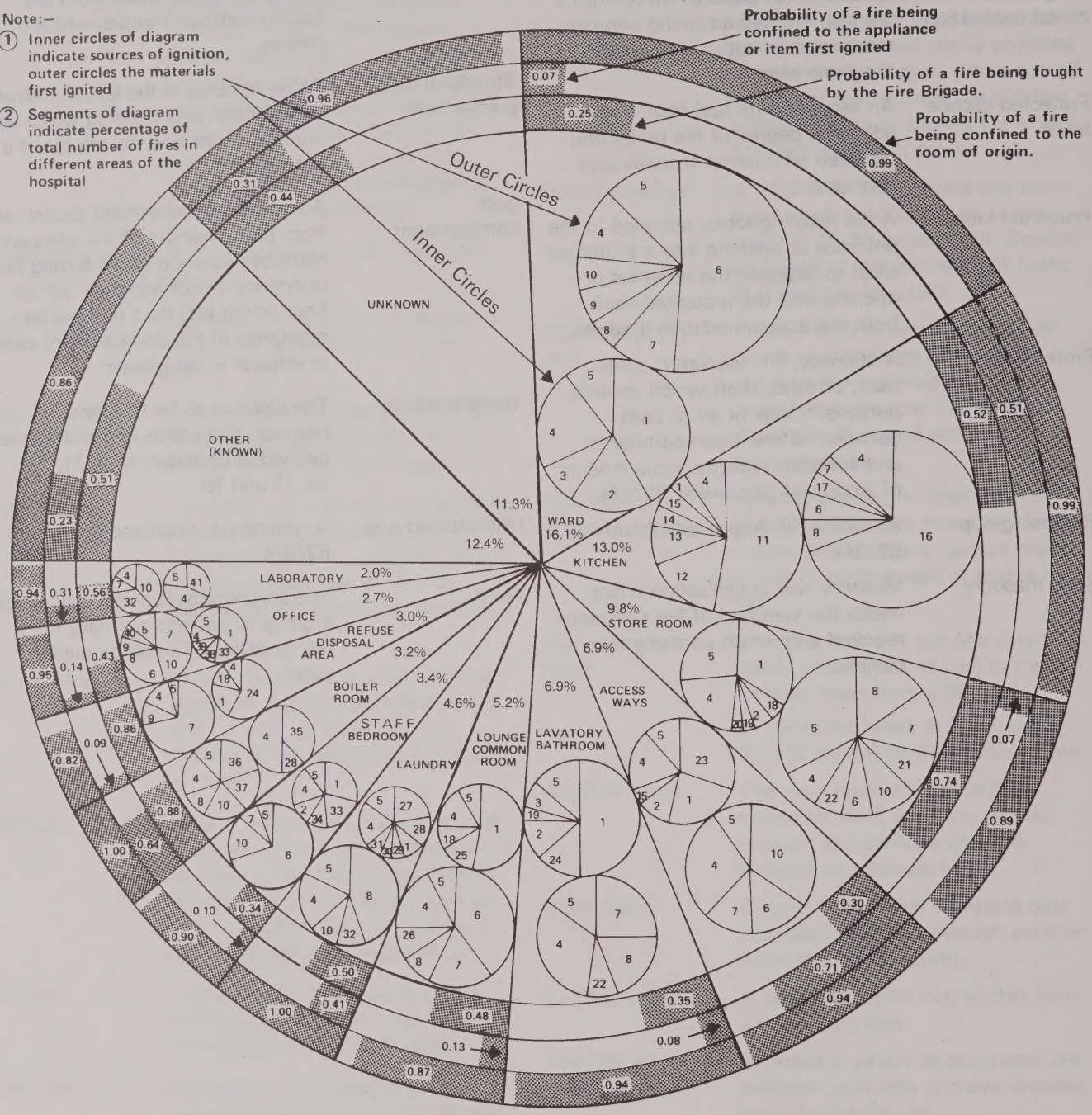

KEY

1	Smoking materials	15	Refrigerator	29	Washing machine
2	Malicious	16	Food - fat	30	Clothes iron
3	Matches	17	Gases	31	Mechanical heat or sparks
4	Other (known)	18	Naked light	32	Solvents, oils, chemicals
5	Unknown	19	Blowlamp	33	Radiant heater, fire in grate
6	Furniture, furnishings	20	Children with fire	34	Electric socket and switches
7	Unspecified waste	21	Cleaning material	35	Central heating
8	Textiles	22	Packing materials	36	Fuel oils, paint
9	Structure	23	Lift	37	Lagging
10	Electrical insulation	24	Incinerator	38	Radio, Radiogram
11	Deep frying range	25	Television sets	39	Other domestic appliances
12	Ring, hot plate	26	Decorations, Xmas tree	40	Paper etc.
13	Oven	27	Clothes drying apparatus	41	Bunsen burner, hot plate
14	Cooker (unspecified)	28	Welding & cutting equipment		

Appendix 3

RISK CATEGORIES

DEPARTMENT	RISK			HIGH FIRE LOAD
	HIGH LIFE	LOW LIFE	HIGH FIRE	(Should be sited away from life risk depts)
Accident & Emergency	●			
Administration		●		
Ambulance Station		●		
Boiler House			●	●
Catering:-				
Kitchen			●	●
Dining Room		●		
Central Sterile Supply				●
Community Hospital	●			
Day Hospital	●			
Dental Workshop		●		
Diagnostic X-ray	●			
Education				
Nurse training School	●			
Post-graduate Medical Education	●			
Health Centres		●		
Hospital Sterilising and Disinfecting Unit			●	●
Intensive Therapy Unit and Coronary Care Unit	●			
Laundry			●	●
Main Electrical Gear (Transformer, Switch etc)			●	●
Maternity nursing Section including Delivery Suite	●			
Medical Photography		●		

DEPARTMENT	RISK			HIGH FIRE LOAD
	HIGH LIFE	LOW LIFE	HIGH FIRE	(Should be sited away from life risk depts)
Medical Records			●	●
Mortuary & Post Mortem Room		●		
Occupational Therapy	●			
Operating	●			
Outpatients	●			
Pathology			●	
Patients Services		●	●	●
Pharmaceutical		●		
Pharmaceutical (Manufacturing)				●
Radiotherapy Unit	●			
Refuse Collection Disposal Area Incineration			●	●
Rehabilitation	●			
Renal Units	●			
Residential Accommodation for Staff	●			
Neo Natal Unit	●			
Staff Changing			●	
Stores:-				
Main Store			●	●
Flammable Store			●	●
Medical Gas Store			●	●
Telephone Exchange		●		
Theatre Sterile Supply Unit		●		
Wards	●			
Works			●	●

Appendix 4

Protection of re-entrant angles against transfer of fire between adjacent compartments and sub-compartments and protected shafts

A4.1 Any compartment, sub-compartment or protected shaft wall at or near* a 90° re-entrant angle requires to be checked against the table below to ascertain if protection is required at the re-entrant angle to prevent the transfer of fire across the re-entrant angle between the adjoining compartments, sub-compartments or protected shaft.

A4.2 The method of preventing transfer of fire across a re-entrant angle is to provide a storey height non-combustible external wall or walls (protecting wall) adjacent to or abutting the re-entrant angle. The length of wall required is dependent upon the height of the unprotected areas of external wall on either side of the re-entrant angle.

A4.3 The protecting wall should have a non-combustible external face and be constructed to the same fire resisting standard as the rest of the building.

HEIGHT OF UNPROTECTED AREAS IN METRES	LENGTH (PW) OF PROTECTING WALL IN METRES
0.5	0.5
0.75	0.7
1.0	0.9
1.25	1.2
1.5	1.4
1.75	1.65
2.0	1.85
2.25	2.1
2.5	2.3
2.75	2.5
3.0	2.7
3.25	2.85
3.5	3.1
3.75	3.25
4.0	3.4

Method of calculating the required length of wall

A4.4 Establish the height of the unprotected areas, as defined in the Building Regulations, on each side of the re-entrant angle within the storey within which the unprotected areas occur. NB: Not the height of the unprotected areas above ground level but their actual height within the storey under consideration. If the height of the unprotected areas vary on the two sides of the re-entrant angle the maximum height should be used for calculation purposes.

A4.5 From the table read off the length of protecting wall required for the height of unprotected area.

A4.6 Check whether or not a compartment, sub-compartment or protective shaft wall occurs on either or both sides of the re-entrant angle within the distance requiring protection.

A4.7 The following diagrams illustrate the method of measuring the distance of a compartment, sub-

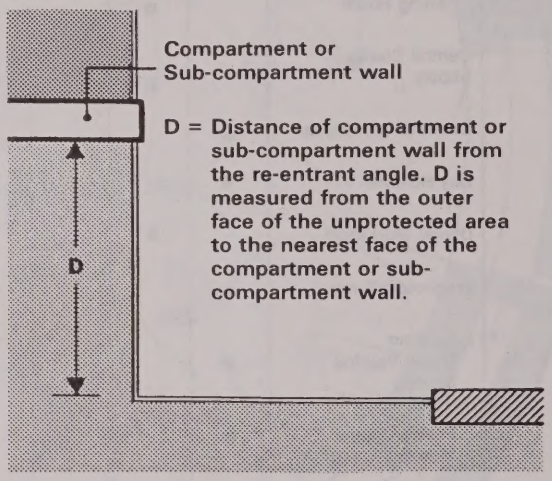

Diagram 1

Method of measuring the distance (D) of compartment or sub-compartment wall from a re-entrant angle.

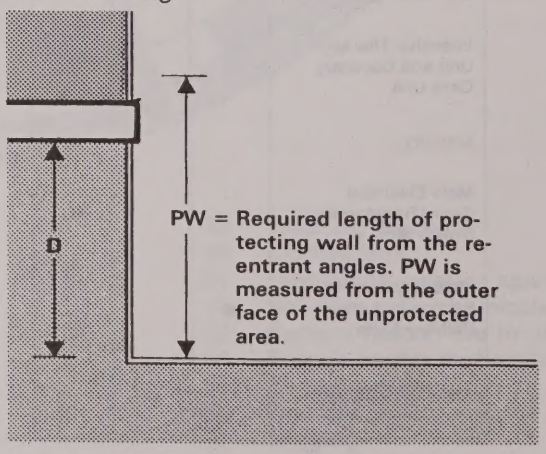

Diagram 2

If D exceeds PW protection is not required. If PW exceeds D protection is required.

* The table will quantify the term 'near'.

compartment wall or protected shaft from a re-entrant angle and the required length of protecting wall from a re-entrant angle.

The method of determining the final net length of protecting wall is best illustrated by the following three examples which also contain optional alternatives.

Example 1

Assume:

a. A compartment wall is located a distance of 1.5 metres from the re-entrant angle.

b. The maximum height of windows on each side of the re-entrant angle is 2 metres.

From the table read off the required length of protecting wall opposite the 2 metre height of unprotected area, which gives a length (PW) of 1.85 metres.

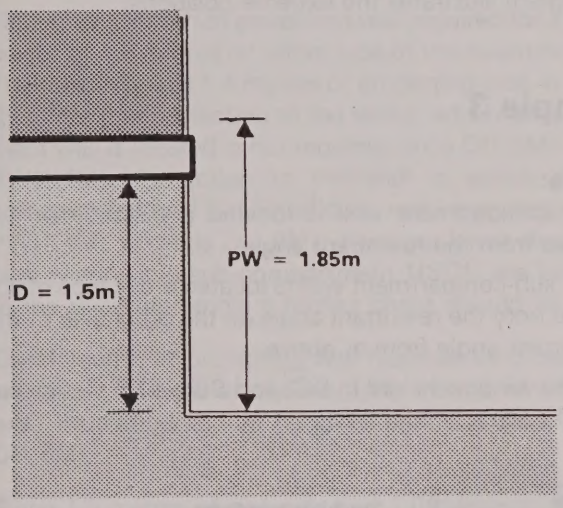

Diagram 3

Protection is required

Since 1.5 metres of the re-entrant angle return falls within the same compartment it is not necessary to protect this length of unprotected wall. Protection to prevent the transfer of fire between the adjacent compartments can still be achieved by omitting this length of protecting wall as follows:

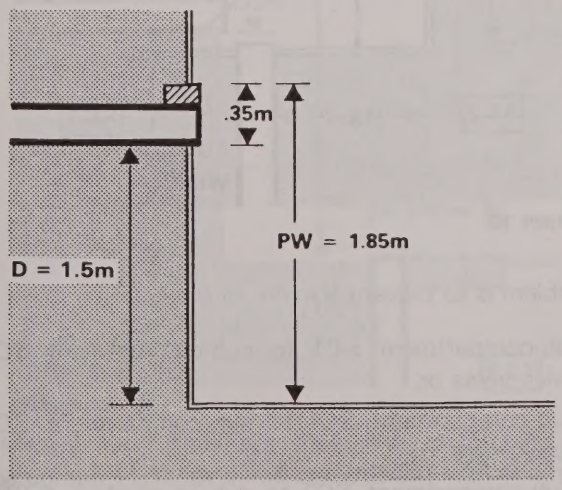

Diagram 4

However this does not meet the recommendation of paragraph 11.12 for a non-combustible wall of a minimum length of 1 metre to separate adjoining compartments and sub-compartments. Therefore the 0.35 metres of wall should be increased to at least one metre as follows:

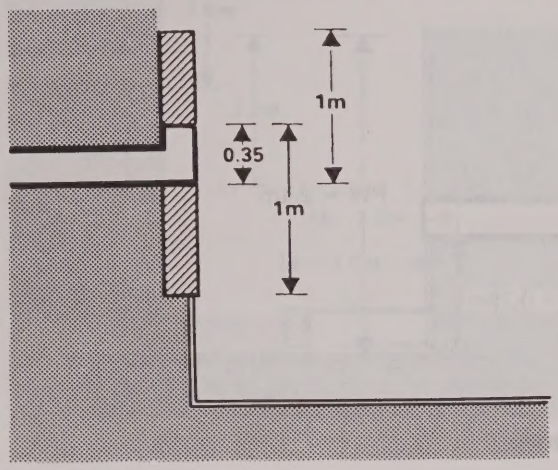

Diagram 5

The previous diagram illustrates the two extreme positions for the one metre wall. The one metre wall can be located in any intermediate position between the two extremes. The location of the 0.35 metres of protecting wall should always remain constant.

As an alternative to the previous solution the required length of 1.85 metres of protecting wall can be located on the other side of the re-entrant angle. In this instance the entire required length of the protecting wall must be provided as follows:

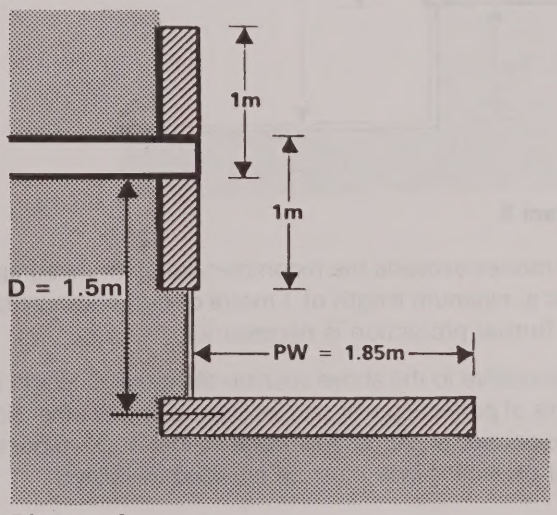

Diagram 6

The minimum one metre length of wall at the junction of the compartment wall and external wall is still required to meet the recommendation of paragraph 11.12.

Example 2

Assume:

a. A compartment wall is located a distance of 0.75 metres from the re-entrant angle.

b. The maximum height of windows on each side of the re-entrant angle is 2.25 metres.

From the table read off the required length of protecting wall opposite the 2.25 metre height of unprotected area, which gives a length of 2.1 metres.

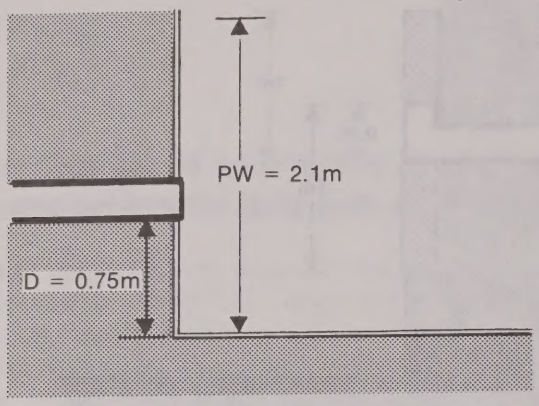

Diagram 7

Protection is required

Since 0.75 metres of the re-entrant angle return falls within the same compartment it is not necessary to protect this length of unprotected wall as follows:

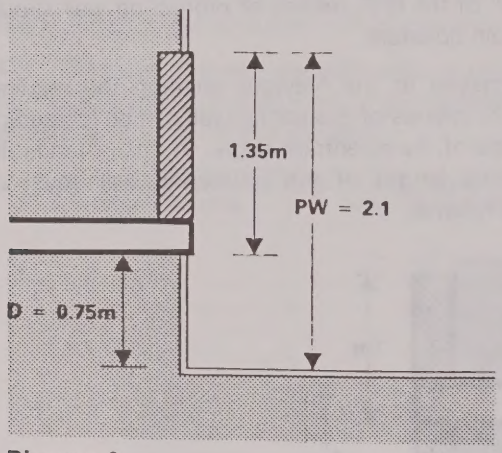

Diagram 8

As 1.35 metres exceeds the recommendation in paragraph 11.12 for a minimum length of 1 metre of non-combustible wall no further protection is necessary.

As an alternative to the above solution the required length of 2.1 metres of protecting wall can be located on the other side of the re-entrant angle. In this instance the entire required length of protecting wall must be provided as follows:

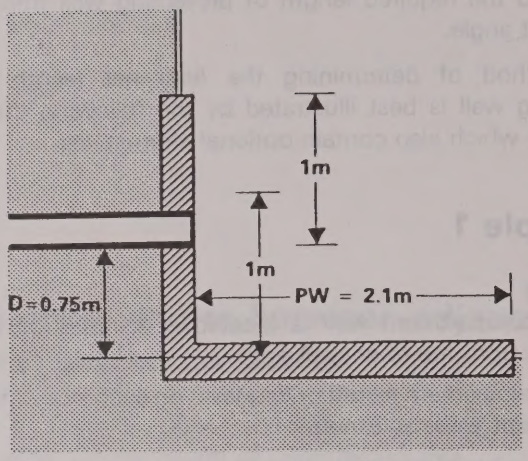

Diagram 9

The minimum one metre length of wall at the junction of the compartment wall and external wall is still required. The diagram illustrates the extreme positions.

Example 3

Assume:

a. A compartment wall is located a distance of 1.5 metres from the re-entrant angle.

b. A sub-compartment wall is located a distance of 1.0 metre from the re-entrant angle on the other side of the re-entrant angle from a. above.

c. The window height in SC2 and SC3 is 1.5 metres but is 2.0 metres high in SC1.

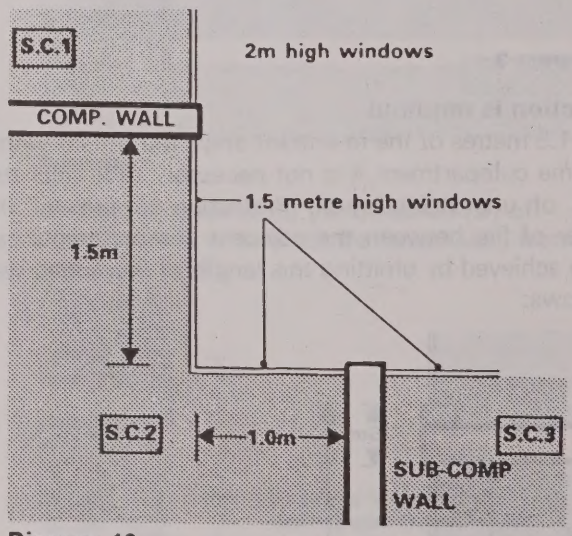

Diagram 10

The problem is to prevent transfer of fire from:

i. Sub-compartment SC1 to sub-compartment SC2 and vice versa or,

ii. Sub-compartment SC1 to sub-compartment SC3 and vice versa, or

iii. Sub-compartment SC2 to sub-compartment SC3 and vice versa.

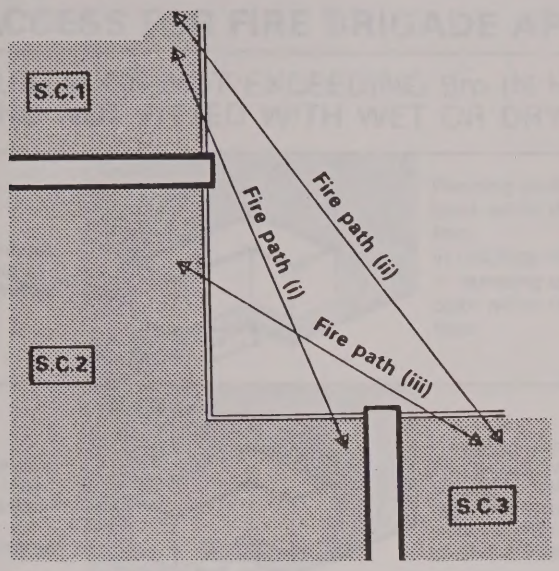

Diagram 11

First, check length of protecting wall required for a window height of 1.5 metres on either side of the re-entrant angle. The table requires 1.4 metres of protecting wall. It appears therefore that protection to the wall in which the compartment wall is located is not required since D(1.5M) exceeds PW(1.4M). Protection to the wall in which the sub-compartment wall is located does require protection since PW(1.4M) exceeds D(1.0M). However since the 2 metre high windows in sub-compartment 1(SC1) are fairly close to the re-entrant angle a further check should be made.

Check length of protecting wall required for 2 metre high windows. The table requires 1.85 metres of protecting wall. Protection should be given as PW(1.85M) exceeds D(1.5M).

Since 1.5 metres of one side and 1.0 metres of the other side of the re-entrant angle fall within the same sub-compartment (SC2) it is not necessary to protect these lengths of the re-entrant angle provided that the residue of the 1.85 metres of protecting walls are incorporated on BOTH sides of the re-entrant angle.

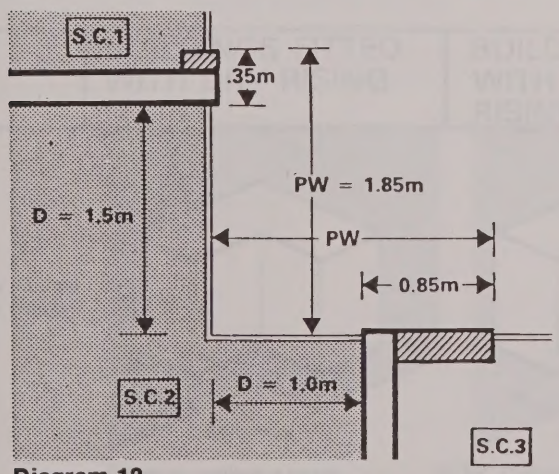

Diagram 12

However this does not meet the recommendation of paragraph 11.12 for a non-combustible wall of a minimum length of 1 metre to separate adjoining compartments and sub-compartments, therefore, each length of protecting wall should be increased to at least one metre as follows:

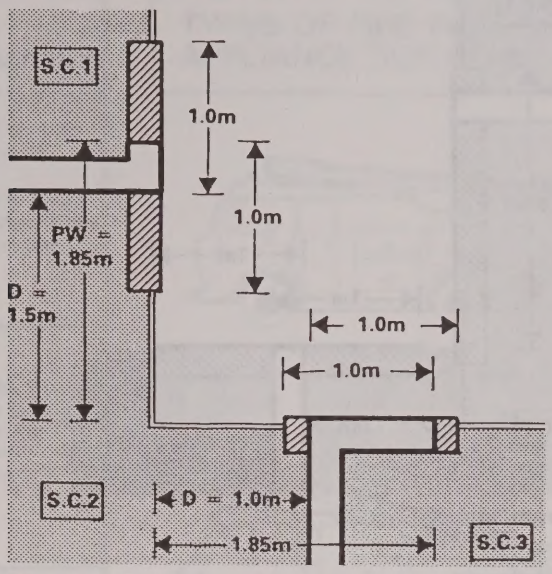

Diagram 13

The above diagram illustrates the two extremes for the one metre wall. The one metre wall can be located in any position between the two extremes. The location of the protecting walls must always remain constant.

As an alternative to providing protection on each side of the re-entrant angle, protection can be achieved by providing a protecting wall to one side only as illustrated (see over).

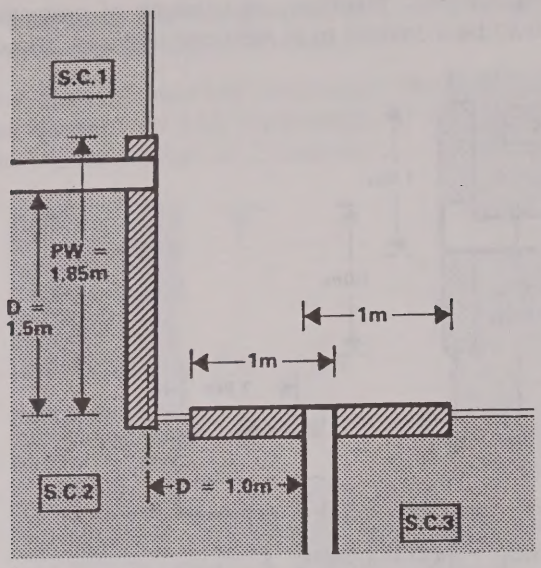

Diagram 14

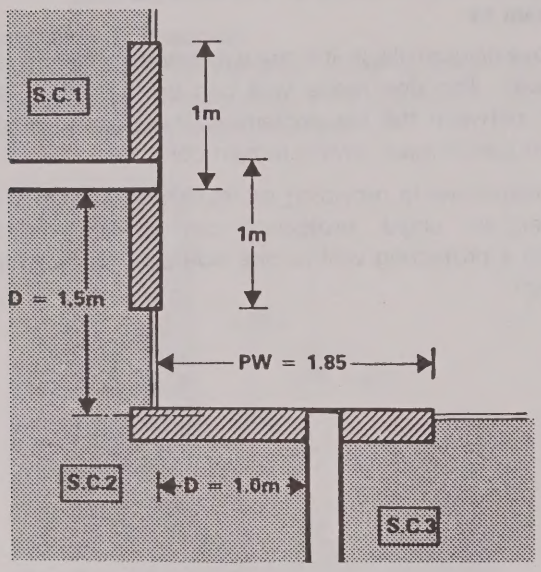

Diagram 15

If protection is provided to one side of the re-entrant angle only the protecting wall must be continuous and imperforate for its entire required length. The one metre minimum protection recommended in paragraph 11.12 is automatically provided to the compartment wall in the first example above and to the sub-compartment wall in the second example above. Protection to the sub-compartment wall in the first example and the compartment wall in the second example is required and the diagrams illustrate the extreme positions within which the minimum recommended length of one metre should be provided.

Appendix 5

ACCESS FOR FIRE BRIGADE APPLIANCES

BUILDINGS NOT EXCEEDING 9m IN HEIGHT AND NOT FITTED WITH WET OR DRY RISING MAINS

Volume up to 7,100m^3

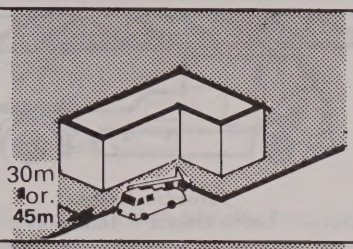

Pumping appliance within 30m of any point within the area of the ground floor.
In buildings not exceeding 6m in height – pumping appliance within 45m of any point within the area of the ground floor.

Volume from 7,100m^3 to 28,500m^3

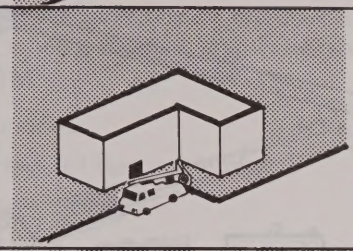

Pumping appliance along the face of any perimeter wall or walls giving access to the interior of the building where the total length of such walls exceeds 16% of the combined length of all perimeter walls.

Volume 28,500m^3 to 56,500m^3

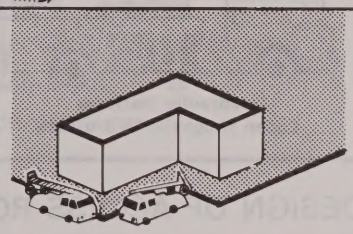

Pumping appliance along 50% of the combined length of all perimeter walls.

Volume 56,500m^3 to 85,000m^3

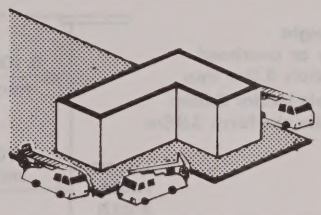

Pumping appliance along 75% of the combined length of all perimeter walls.

Volume over 85,000m^3

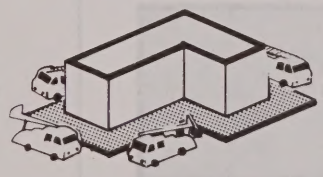

Pumping appliance along all perimeter walls.

	BUILDINGS FITTED WITH DRY RISING MAINS	BUILDINGS FITTED WITH WET RISING MAINS
Any volume any height	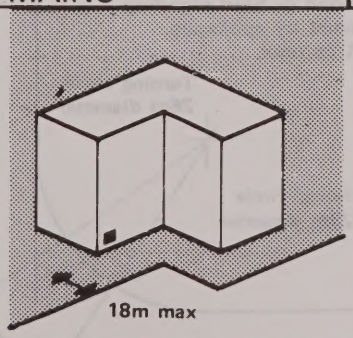 18m max	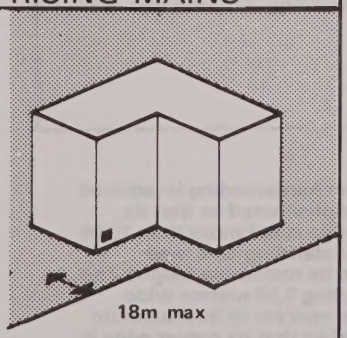 18m max
	Pumping appliance to be within 18m of the foot of each rising main and within sight of the inlet to the rising main.	Pumping appliance to be within 18m of the ground floor access point of the stairway enclosure, in which the main is situated or, if the main is not situated in a stairway enclosure within 18m of the foot of the nearest enclosed stairway to the main and within sight of the inlet to the rising main.

TYPES OF FIRE FIGHTING APPLIANCE SUITABLE

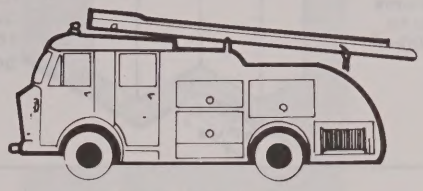

Pumping Appliance
Laden Weight – 12.5 tonnes

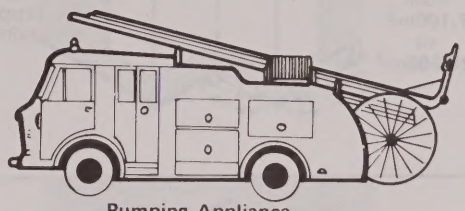

Pumping Appliance
Laden Weight – 12.5 tonnes

DESIGN OF ACCESS ROUTE

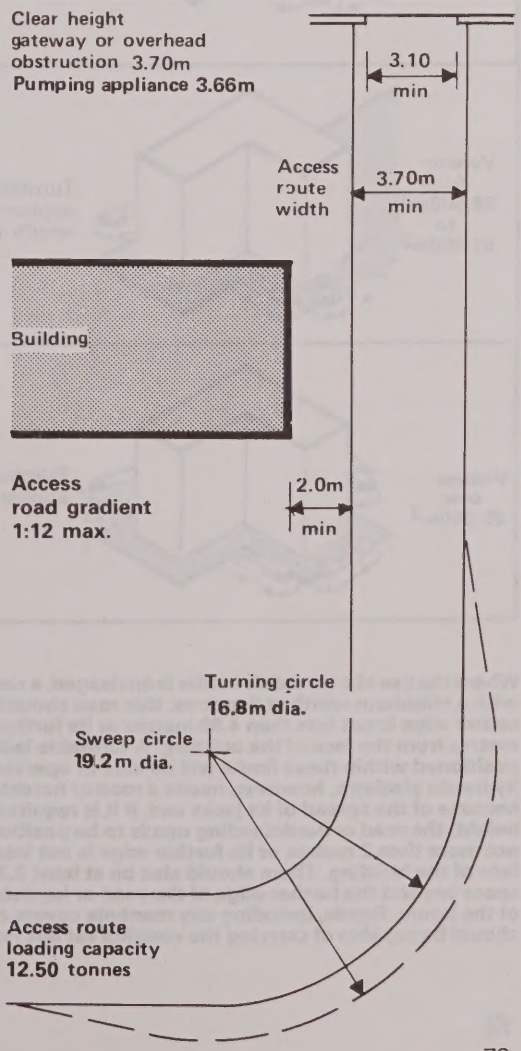

BUILDINGS EXCEEDING 9m IN HEIGHT

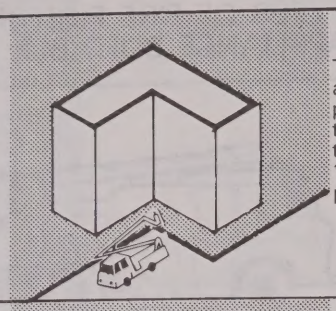

Volume up to 7,100m^3

Turntable ladder or hydraulic platform appliances along the face of any perimeter wall or walls, giving access to the interior of the building, where the total length of such walls exceeds 16% of the combined length of all perimeter walls.

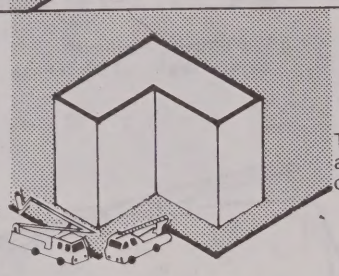

Volume from 7,100m^3 to 28,500m^3

Turntable ladder or hydraulic platform appliances along 50% of the combined length of all perimeter walls.

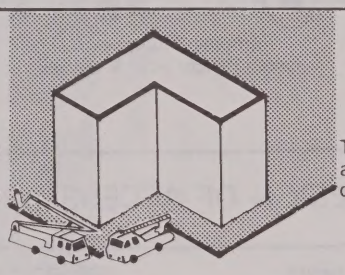

Volume 28,500m^3 to 56,500m^3

Turntable ladder or hydraulic platform appliances along 50% of the combined length of all perimeter walls

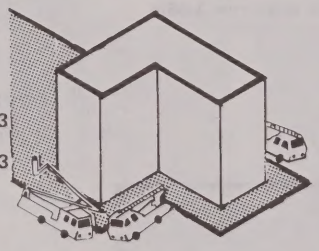

Volume from 56,500m^3 to 85,000m^3

Turntable ladder or hydraulic platform appliances along 75% of the combined length of all perimeter walls.

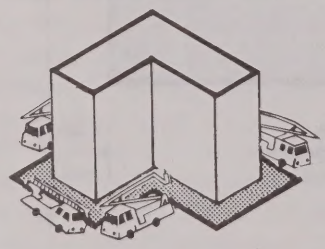

Volume over 85,000m^3

Turntable ladder or hydraulic platform appliances along all perimeter walls.

Where the use of a turntable ladder is envisaged, a road or hardstanding is required with a minimum width of 5 metres, this road should be positioned so that its nearer edge is not less than 4.88 metres or its further edge is not more than 10.06 metres from the face of the building. A turntable ladder standing on a road positioned within these limits will be able to operate to its maximum height. The hydraulic platform, however, needs a road or hardstanding 5.50 metres wide because of the spread of its jacks and, if it is required to operate to its maximum height, the road or hardstanding needs to be positioned so that its nearer edge is not more than 2 metres or its further edge is not less than 7.50 metres from the face of the building. There should also be at least 2.2 metres of unobstructed space beyond the further edge of the road or hardstanding to allow for the sweep of the boom. Roads, including any manhole covers and public utility service pits, should be capable of carrying the weights set out for the respective appliances.

TYPES OF FIRE FIGHTING APPLIANCE SUITABLE

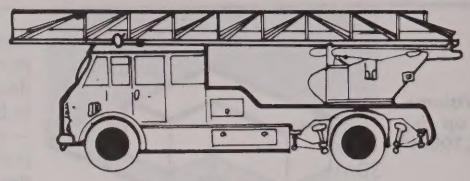

Turntable ladders
Laden Weight – 14.2 tonnes

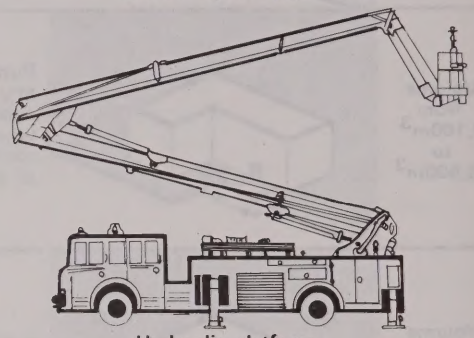

Hydraulic platform
Laden Weight – 18.3 tonnes

DESIGN OF ACCESS ROUTE

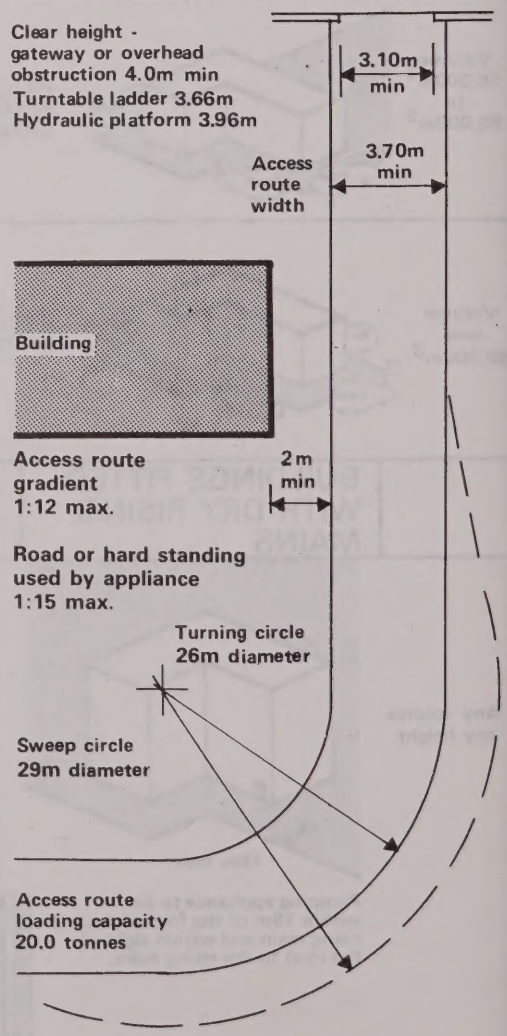

Appendix 6 Fire Practice Notes

The following is a list of Fire Practice Notes, the first four of which are currently in the course of preparation. The Notes, when published, should be read in conjunction with this HTM.

1 Laundries
2 Storage of flammable liquids
3 Escape bed lifts
4 Kitchens
5 Boiler and incinerator rooms
6 Laboratories
7 Radiological areas

INDEX

A

Access
Ambulance: 17.49
Basement: 11.16
Drawings: 23.5/6
Hospital: 5.4; 11.16; 16.3; 19.1/5
Site: Ap 5; 4.12; 5.4; 21.24/25

Access panel
Ceilings: 11.31
Fire resisting construction: 20.22

Access room
Definition: Ap 1
Part of an escape route: 17.4/5
Doors: 17.6
Escape Route: see separate entry
Fire hazard room: 17.5
Glazing: 17.6
Travel distance: 17.72
Vision panels: 17.6
Other requirements: see Rooms

Access route
(See Roads)

Accident and emergency dept
Risk category: Ap 3

Accommodation
Definition: Ap 1
Hospital street: 16.19
Main entrance hall: 16.1
Protected escape route: 18.16
Protected lobbies: 18.32
Protected shaft: 18.16
Protected shaft serving: 18.22; 18.24
Roof escape route, enclosed: 17.60
Windowless: 11.16

Accommodation stairway
(See Stairway)

Active Fire Precautions
General 21.1
Fire alarm and detection systems: see separate entry
First aid fire fighting equipment: see separate entry
Fixed fire fighting equipment: see separate entry

Administration dept
Risk category: Ap 3

Adult Training Centres
Excluded: 2.3

Alarms
(See Fire alarm and detection systems)

Alterations
Design: 5.3
DHSS submission: 11.7

Alternative exit
(See Exit)
Definition: Ap 1

Alternative means of escape
(See Means of escape; Escape routes)
Definition: Ap 1

Ambulance
Access to assembly point: 17.49

Ambulance station
Risk category: Ap 3

Ancillary services to hospitals
Purpose group: 4.7/8

Angle of divergence of exit
Courtyard: 17.24/25
Escape route: 17.17
Rooms: 17.15

Approved document
(See Building regulations)

Area, floor
(See Size)

Areas, external
(See Courtyards)

Assembly point/position
Ambulance access: 17.49
Courtyard access: 17.24
External escape route: see separate entry
Lighting: 17.53
Local authority consulted: 17.48
Local fire authority consulted: 17.48
Location: 17.48/49
Place of safety: see similar separate entry
Place of safety definition: Ap 1
Principle is travel to: 7.4; 7.6; 7.9; 17.1/3; 17.48
Public road location: 17.48
Ramps: 17.52

Assembly Hall: 17.73

Assembly rooms
Part of escape route: 17.4/5
General: 17.73
Doors: 17.74
Escape routes: 17.33; 17.74/81
Exits: 9.13; 17.73/75; 17.15; 17.81
Number of occupants: 17.74/75; 17.77
Travel distance: 17.78/81
Width: 9.13; 17.75/76
Other requirements: see Rooms

Atrium, atria: 11.44

B

Balustrade
Building Regs; 17.56; 17.58
Handrail: 18.17
Roof escape route, unenclosed: 17.56; 17.58

Basement
Basement storey definition: Ap 1
Different from Building Regs definition: Ap 1
Access: 11.16
Active fire precautions (basement, under building, underground): 11.16; 21.17
Alternative means of escape from exits below ground level: 16.16
Car parks (basement, underground): 12.5/7
Escape: 11.16
External areas: 18.13
Final exits: 16.16/18
Fire resisting construction: 12.2; 15.3
Local Fire Authority: 11.16
Hazards: 11.15
High fire risk: 11.16
Hospital street: 16.17
Plant rooms: 15.3
Protected lobby: 18.23
Single direction of escape: 16.17
Smoke spread: 11.15
Stairways (basement, below ground level): 16.12; 16.16/18; 18.12/13; 18.23
Storage: 11.16
Toxic gas spread: 11.15
Travel distance: 16.12; 16.16/18
Ventilation (basement, underground): 11.15/16; 12.5; 12.7
Ventilation outlets: 11.16; 12.7
Other requirements: see Storey levels

Battery room
(See Plant room)

Bed
(See Equipment)

Bed escape lift
(See Lift)

Bedroom
(See Wards; Overnight stay rooms)

Biological hazards: 14.9; 14.13/14

Boiler house
Drawings: 23.5
Plant rooms: see separate entry
Risk category: Ap 3

Boiler room
(See Plant room)

Boundary
Distance; 4.10

Bridge escape route, enclosed
Accommodation: 17.60
Doors: 8.5; 8.13; 9.5; 17.9; 17.46; 17.59/60; 20.22
Escape route: 17.59/60 and see separate entry
Exits: 8.5; 8.13/14; 9.5; 17.59
Fire resisting construction: 8.5; 8.13
Lighting: 17.46
Roof escape route, enclosed: see separate entry
Roof escape route, unenclosed: see separate entry
Stairway: 17.57/58
Travel distance: 8.5; 17.60
Other requirements: see Escape route

British standards
BS476: Part 8: 1972
Ceilings: 9.9; 11.32; 14.3
Doors: 20.7
Ductwork: 22.11
Glazing: 10.10; 13.3/4; 14.7; 17.17; 17.54; 20.7
Surface spread of flame: 11.11
Walls: 9.8
BS1635
Symbols: 23.8
BS4547
Classes of fire: 21.3
BS5266
Escape lighting: 21.30
BS5306
Fire extinguishers: 21.8; 21.11
Fire hydrants & foam: 21.22
Gas flooding: 21.21
Hose reels: 21.5
Sprinklers: 21.18
Wet and dry risers: 21.27
BS5410: 1978
Plant rooms: 15.3
BS5423 Fire extinguishers: 21.9
BS5588
Fire fighting lifts and stairs: 19.4/5
Codes of practice generally
Means of escape: 8.4; 8.12
CP 290: 1973
Ceilings: 11.33
CP 413: 1973
Ducts: 15.6; 22.8

Building regulations 1985
(See also Legislation)
Compliance with: 4.1/3
Approved document B2/3/4
Atria: 11.44
Basement storey definition different: Ap 1
Cavity barriers: 9.10; 11.31/32; 11.34
Certain departments in accordance with: 8.19
Compartments in accordance with: 8.2; 8.4; 8.12; 8.16; 9.1; 10.4; 16.7
Compliance: 4.2/3
Doors: 20.2; 20.6
Door closers: 8.11
Drainage pipes: 11.37/38
Element of structure: 17.54
External walls: 17.54
Fire resisting construction: 8.19
Fire shutters: 20.9
Fire stopping: 11.34/35; 22.24
Permits unlimited height and volume: 11.1
Plastics materials: 11.29
Protected lobbies: 18.32
Protected shafts: 18.4; 18.11; 18,16; 18.37
Purpose group designation: Ap 1; 4.6/8
Roofs: 11.13
Self closers to doors: 18.11
Separation of buildings: 4.10/12; 11.21
Smoke detectors: 22.7
Stairways: 18.17
Structural fire precautions: 4.3; 4.8
Structural fire precautions additional to: 7.3; 8.2; 11.13; 14.10/12
Surface spread of flame: 11.11; 11.22/23; 11.26/27
Suspended ceilings: 11.31
Walls: 8.16; 17.54
Wall and ceiling surfaces: 11.11; 11.22/23; 11.26/27
Approved document K1/2/3
Balustrades: 17.56; 17.58
Stairways: 18.19

Building shape
(See Shape of building)

Building types
Purpose group designation: 4.6

C

Cables
Fire stopping: 11.35
PVC cables: 15.12
Terminal boxes: 9.8

Cafeteria
Number of occupants vary: 17.30

Capacity
(See Occupant capacity, Size)

Car parks
Doors: 12.3
Fire resisting construction: 12.2; 12.6
Ground level: 12.1
Open air: 12.4

Ramps: 12.6
Sprinklers: 21.17
Under building: 12.2/3
Underground: 11.16; 12.5/7
Ventilation: 12.5

Catering
Cafeteria: 17.30
Dining rooms: see separate entry
Finishing kitchen: 14.8
Kitchen: see separate entry
Kitchenette: 14.8
Pantry: 14.8
Restaurant: 17.30; 17.73
Risk category: Ap 3

Cavity barriers
Definition: Ap 1
General: 11.34; 11.36
Building Regs: 9.10; 11.31/32; 11.34
Ceiling space: 11.31/32; 11.36
Ducts and shutters: 22.18
Drawings: 23.7
Escape through: 17.61
Roof space: 9.10
Smoke spread: 11.34
Wall alignment: 11.36

Ceilings
General: 11.30/33
Access panels: 11.31
Building Regs: 11.31
BS476: 9.9; 11.32; 14.3
Cavity barriers: 11.31/32; 11.36 and see separate entry
Ceiling void: see separate entry
CP 290: 11.33
Ducts: 9.9; 14.3
Escape routes above: 17.61
Finishes: 11.22; 11.26
Fire and smoke spread: 11.32
Fire hazard rooms: 14.3
Fire resisting construction: 9.9/11; 10.7; 11.30/32; 14.3; 20.22
Fire shutters: 9.9; 14.3; 22.8; 22.16
Geriatric ward: 13.2; 22.16
Glazed screens: 14.3; 14.6
Lighting fittings: 9.9; 11.30; 14.3
Linings: 11.11
Mental illness ward: 13.2; 22.16
Roofs, pitched: 9.9/11; 22.16
Sub-compartment: 9.9/11
Walls terminating at: 9.9; 10.7; 13.2; 14.3

Ceiling void
Definition: Ap 1
Cavity barriers: see separate entry
Ceilings: see separate entry
Escape from: 17.61/66
Fire alarm call points: 17.63
Fire alarm sounders: 17.63
Travel distance: 17.61; 17.65/66

Central sterile supply dept
(See CSSD)

Certificates
Design and construction to Concode: 4.1
Fire certificates: see separate entry

Changing rooms
Fire hazard room: 14.8

Chemical stores
Fire hazard room: 14.8

Circulation space
Definition: Ap 1; 17.26/27
Designed as escape route: 17.4/5; 17.27; 17.36
General: 17.1/2
Cupboard doors: 20.10
Doors: 8.17; 17.9; 17.16/18; 20.10; 20.17
Door recesses: 17.19/23
Drawings: 23.6/7
Escape routes: see separate entry
Fire hazard rooms off: 14.5; 14.7
Fire load: 17.35
Fire risk: 17.35
Geriatric ward: 17.34
Glazed screens: 10.10; 13.4; 14.7
Mental illness ward: 17.34
Number of users: 17.33
Obstruction of: 17.36; 20.10
Open areas off: 17.34/38
Protected escape route: 18.16 and see separate entry
Protected lobbies: 18.26/27; 18.29 and see separate entry
Single & alternative directions of escape junction: 17.17
Small detached hospital extensions: 8.26
Stairways: 18.11 and see separate entry
Ward bedroom: 8.21/23; 17.26
Width: 17.28/33; 17.38; 17.41; 17.76
Other requirements: see Escape route

Claddings
External 11.11

Class of surface spread of flame
(See Surface spread of flame)

Cleaners room
Fire hazard room: 14.8

Client
Agree door closer/opener devices: 20.20; 22.26
Consultation with: 5.1; 5.5; 21.10

Chute
Protected lobby to shaft: 18.23; 18.30

Cloakrooms
Fire hazard room: 14.8

Clothes stores
Fire hazard room: 14.8

Coatings
Test ratings to: 11.28

Codes of practice
(See British standards)

Combustible materials
High fire load areas: 6.7
Hospital street: 16.4
Switchgear rooms: 15.11
Vertical fire spread: 11.11

Committee rooms
Number of occupants varies: 17.30

Common rooms
Fire hazard room: 14.8

Communication route, main
(See Hospital street)

Community homes
Excluded: 2.3

Community Hospital
Risk category: Ap 3

Compartment
Definition: Ap 1
General: 8.1/2
Building Regs: 8.2; 8.4; 8.12; 9.1; 10.4; 16.7
Departments in: 8.3; 8.11; 8.19; 8.24
Doors: 8.17; 20.1; 20.6
Drawings: 23.6/7
Electrical installations: 15.8
Exits: 8.5/8; 8.13/14; 8.21/23; 8.26/27; 9.5; 9.16; 16.5; 16.8/12; 17.4; 17.64; 17.79/80
External walls: 11.12
Fire hazard rooms: 8.4; 8.12; 14.1
Fire resisting construction: 10.2/4; 11.12
Floors: see Compartment floors

High rise hospitals: 11.6/7; 11.10
Hospital street as: 16.1; 16.7
Hospital street serving: 8.3; 16.8/12
Hospitals with hospital street: 8.3/9
Hospitals without hospital street: 8.10/15
Landing valve location: 21.28
Lift motor room as: 18.39
Linking corridor as: 4.9
Numbers: 8.3; 8.11
Number of occupants: 8.9; 8.15
Patients: 8.3/5; 8.10/12; 8.26/27; 18.40/41
Progressive horizontal evacuation: 7.10; 8.2/4; 8.11/12
Protected lobbies: 18.25
Purpose group designation: 4.6
Re-entrant angles: Ap 4; 11.17; 11.20
Separation externally: 11.12
Size to Building Regs: 4.6/9
Small detached hospital extensions: 8.26/29
Smoke and toxic gas spread: 8.14; 20.1/2
Stairway separation: 11.16; 16.8; 18.6
Structural fire precautions: 8.1/2; 8.4; 8.12
Structural requirements: 8.16/18
Sub-compartments: 9.1/6 and see separate entry
Travel distance: 8.25; 8.28; 16.12; 18.35
Walls: See Compartment walls
Wards: 8.3; 8.11; 8.20/23; 8.26

Compartment floors
Definition: Ap 1
Atria: 11.44
Drainage pipes: 11.38/39
Expansion joints: 8.18
Fire resisting construction: 11.31; 12.6; 16.7
Fire shutters: 22.10
Hospital streets: 16.7
Roofs designed as: 11.13/14
Transfer grilles: 22.19/20

Compartment walls
Definition: Ap 1
Doors: 8.17; 8.23; 20.1; 20.6; 20.22
Expansion joints: 8.18
Fire resisting construction: 8.16; 8.19; 16.7
Fire shutters: 22.10, 22.15
Fire stopping: 11.31
Glazed screens: 14.7
Protected lobby wall: 18.30
Structural requirements: 8.16/19
Transfer grilles: 22.19/20
Other requirements: see Walls

Compartmentation
(See Compartments)

Computer rooms & suites
Fire fighting: 21.19
Fire hazard room: 14.8

Concode part II
To be followed: 4.1

Conduits
Fire stopped: 9.9; 11.35; 14.3

Construction
(See Fire resisting construction)

Consultation
Client/architect/engineer: 5.1
DHSS: 2.7/8; 11.7
Client/staff: 5.5; 21.10
Health & Safety Executive: 3.4; 5.6; 11.43
Local authority: 17.48
Local Fire Authority/architect/engineer: 2.8; 4.4; 5.2/4; 11.7; 11.16; 13.1; 16.22; 21.10; 21.16; 27.23
Users: 21.10

Contents of rooms
Governed also by Fire Precautions Regs 1976: 3.3

Conterminous
Compartments with departments: 8.24
Subcompartment with departments: 9.15

Coronary care unit
Bed lifts: 18.41
Intensive therapy unit: see separate entry
Number of patients: 8.19
Solid masonary walls: 8.19
Other requirements: see Wards

Corridor
(See Circulation space, Linking corridor)

Co-terminous
(See Conterminous)

Courtyards and lightwells
Angle of divergence of exit: 17.25 and see separate entry
Doors: 17.10; 17.24/25
Escape route: 17.24/25; 18.13 and see separate entry
Exits: 17.24/25
External areas at basement level: 18.13
External escape route: see separate entry
Re-entrant angle: see separate entry
Separation of buildings requirement: 4.11; 11.21
Staff/patient use: 17.24/25; 18.13
Other requirements: see Escape route

CSSD
Fire hazard rooms: 14.8
Risk category: Ap 3

Cupboards
Doors: 20.10
Switchgear: 14.4; 15.10/11

D

Day centres
Excluded: 2.3

Day hospital
Number of patients: 9.13
Risk category: Ap 3

Day nurseries
Excluded: 2.3

Day rooms
Fire hazard rooms: 14.7/8

Definitions of terms: Ap 1

Delivery suite
Risk category: Ap 3

Dental workshop
Risk category: Ap 3

Department of Health and Social Security
(See DHSS)

Departments, hospital
Access rooms: see separate entry
Accident and emergency: Ap 3
Administration: Ap 3
Ambulance station: Ap 3
Ancillary services: 4.7/8
Assembly hall: 17.73
Assembly rooms: see separate entry
Building Regs: 8.19
Cafeteria: 17.30
Catering: Ap 3
Changing rooms: 14.8
Circulation space: see separate entry
Cleaners room: 14.8
Cloakrooms: 14.8
Clothes store: 14.8
Common rooms: 14.8
Compartmentation: 8.3; 8.11; 8.24
Computer rooms: 14.8; 21.19
CSSD: Ap 3; 14.8
Delivery suite: Ap 3
Dental workshop: Ap 3

Diagnostic x-ray: see separate entry
Dining room: see separate entry
Doors: 16.5; 16.8/12
Drawings: 23.7
Education: Ap 3
Exit/entrance to hospital street: 16.5; 16.8/12
Fire risk/load categories: Ap 3
Fire hazard rooms: 14.7/8 and see separate entry
Gymnasium: 9.13
High rise hospitals: 11.7; 11.10
HSDU: Ap 3
Incineration: Ap 3
Inner rooms: see separate entry
Intensive therapy unit: see separate entry
Kitchen: see separate entry
Laboratories: see separate entry
Laundry: Ap 3; 14.7/8; 14.11
Lecture room: 14.8; 17.73
Library: 14.8
Life risk categories: Ap 3
Linen store: 14.8
Locker room: 14.8
Main store: Ap 3
Medical photography: Ap 3
Medical records: Ap 3; 14.8
Medical staff room: 14.8
Mortuary and post mortem room: Ap 3
Neo natal unit: see separate entry
Number of occupants in certain departments: 9.2
Nurse training school: Ap 3
Occupational therapy: Ap 3; 14.7/8
Offices: 3.1
Operating theatre: see separate entry
Out patients: see separate entry
Overnight stay rooms: see separate entry
Pathology: Ap 3; 14.7/8
Patients services: Ap 3
Pharmacy: see separate entry
Physiotherapy: 14.7/8
Plant rooms: see separate entry
Post graduate medical education: Ap 3
Post mortem room: Ap 3
Radiotherapy: see separate entry
Refuse collection and disposal: Ap 3
Rehabilitation: Ap 3; 9.13
Renal unit: Ap 3
Restaurant: 17.30; 17.73
Rooms: see separate entry
Sanitary accommodation: see separate entry
SDU room: 14.8
Services accommodation: see separate entry
Shop: 3.1
Small detached hospital extensions: 8.26
Staff changing: Ap 3
Store rooms: see Storage
Stores department: Ap 3
Sub-compartmentation: 9.2/3; 9.15
Switchrooms: see separate entry
Telephone exchange: Ap 3
Theatre sterile supply: Ap 3; 14.8
Treatment areas: 11.26
Wards: see separate entry
Wax bathrooms: 14.8
Works department: Ap 3
Workshop, occupational therapy: 14.8

Detection
(See Fire alarm and detection systems)

DHSS
Circulars: 1.6
Concode: 4.1
Register of Building Legislation: 4.5
Register of Fire Documents: 4.5
Submission of schemes: 2.7/8; 11.7; 11.44

Diagnostic x-ray
Fire hazard rooms: 14.8
Radio isotope rooms: 14.9; 14.12/14
Risk category: Ap 3

Dining room
Fire hazard room: 14.8
Number of patients: 9.13
Risk category: Ap 3

Dirty air: 16.9

Dirty linen chute
(See Chute)

Distance
Boundary: 4.10
External escape route from surroundings: 17.54
Fire hydrant: 21.25
Hose reel reach: 21.5
Roof escape route from surroundings: 17.56
Stairways apart: 16.10
Travel distance: see separate entry
Wet and dry risers: 21.27

Distribution panels
(See Switchroom)

Door Closers
(See Ironmongery)

Door recesses
Circulation space: 17.19/23

Doors and doorsets
General: 20.1/5
Access panel: 11.31; 20.22
Access rooms: 17.6
Assembly rooms: 17.74
Building Regs: 20.2; 20.6
BS476: 20.7
Bridge escape route: 17.9; 17.46; 17.59/60; 20.22
Car parks: 12.3
Circulation and escape route: 8.17; 8.23; 9.12; 14.1; 17.6; 17.8/10; 17.16/18; 17.59/60; 18.16; 20.9/11; 20.13; 20.17; 20.22
Closers: see Ironmongery
Compartment walls: 8.17; 8.23; 20.1; 20.6; 20.22
Courtyards: 17.10; 17.24/25
Cupboard doors: 20.10
Direction of opening: 3.3; 14.14; 15.5; 17.74; 20.11/12
Drawings: 23.7
Escape route: see Circulation route above
Exits: 17.44/46 and see separate entry
Fastening: 3.3
Fire and smoke spread: 20.2
Fire assessment: 20.7
Fire hazard rooms: 14.4; 20.6; 20.22
Fire resisting construction: 8.5; 8.13; 9.5; 10.5; 10.8; 14.3; 18.16/17; 18.29/30; 20.1; 20.7; 20.22
Fire symbols: 23.8
Fire tests: 20.7
Geriatric ward: 13.2; 20.13; 20.22
Glazing and vision panels: see separate entry
Hazardous activities: 17.16
Hold open devices: see Ironmongery
Hospital street: 9.5; 16.5/6; 16.8; 17.9; 20.17; 20.22
Identification disc: 20.8
Inner rooms: 17.6; 20.13
Ironmongery: see separate entry
Local fire authority consultation: 13.1
Location: 8.23; 20.4; 20.22
Locks: see Ironmongery
Mental illness ward: 13.2; 20.22
Number of users: 20.12
Obstruction: 8.23; 18.18; 20.10
Openings: see separate entry
Plant rooms: 15.5
Protected escape route: 18.16
Protected lobbies: 10.5; 17.9; 18.29/31; 18.34; 18.44/45; 20.6; 20.22
Protected shaft: 16.20; 18.11; 20.6; 20.22
Ramp to: 17.9
Recesses to: 17.19/23
Roof escape routes: 17.9; 17.46; 17.59/60; 20.22
Shutters in: 20.14
Side hung, pivoted or shutters only: 20.9
Signs: 3.3; 8.23; 14.4; 16.20; 17.16; 17.24/25; 18.45
Stairways: 17.9; 18.11; 18.17; 20.17; 20.19; 22.26

Sub-compartment walls: 9.5; 9.7; 9.12; 20.1; 20.6; 20.22
Switchrooms: 14.4
Testing: 20.7
Thresholds: 17.42
Transfer grilles: 20.14; 22.22
Undercutting: 22.22
Unprotected areas: see separate entry
Vision panels: see separate entry
Wards: 13.1/2; 20.6

Drainage
Building Regs: 11.37/38
Fire stopping: 11.38
uPVC pipework: 11.37/39

Drawings
Fire drawings: 23.1/8
Fire symbols: 23.8
High rise schemes: 11.7

Dry risers
(See Fixed fire fighting equipment)

Ducts
(See Mechanical services)

Dwelling houses
Purpose Group: 4.10

E

Eaves
Fire resistance: 9.11

Education areas
Risk category: Ap 3

Electrical services
General: 15.1; 15.7/8; 22.1
Cables: 15.12
Chased into walls: 10.3
Ceilings: 9.9; 11.30; 14.3
Compartments, several served: 15.8
Cupboards and cabinets: 15.10/11
Distribution: 15.7/12; 22.1
Detection: see Fire alarm and detection services
Drawings: 23.7
Electrical distribution room: see Switchroom
Electrical equipment room: see Plant room
Electro magnetic/mechanical closers:
  Fire resisting doors: 20.5; 20.16/17; 22.27
  Stairway doors: 18.11
Escape route locations: 15.9
Fire alarm and detection systems: see separate entry
Fire fighting: 21.4; 21.9; 21.14; 21.19
Fire Practice Note on lifts: 18.48
Fire stopping: 11.35
Flammable dialectric equipment: 15.3; 15.9
HTM 7 & 11: 15.7
IEE Regs: 15.7/8
Life risk areas: 15.9
Lighting: see separate entry
Plant rooms: 15.2/5 and see separate entry
Protected lobbies: 18.21; 18.24/25
Protected shaft off hospital street: 16.20; 18.21
Sub-compartment walls: 9.8; 9.12
Supply failure triggers door closers: 20.16; 20.18
Switchgear separated: 15.8
Switchrooms: see separate entry
Terminal boxes: 9.8

Elements of structure
Definition: Ap 1
Compartment walls and floors: 16.7
Roof designed as: 11.14
Roof escape route, unenclosed: 17.56
Walls near external escape route: 17.54

Elevations
Car parking distance: 12.4; 12.6/7
Fire spread: 11.11/12; 11.17
Separation of buildings requirement: see separate entry

Emergency exits
(See Exits)

Enclosure
Drainage pipes: 11.37/38

Engineering services
(See Mechanical services, Electrical services)

Entrance hall
(See Main Entrance Hall)

Entrances
(See Exit)

Equipment
Beds: 11.41; 13.1
Doors: 20.3
Escape route level: 17.44
Lifts and lobbies: 18.40/48
Obstructing escape route: 8.23
Trolleys: 17.32
Wheelchairs: 17.32; 17.44; 20.3; 20.13
Width for: 17.32; 17.41

Escape route
(Indented entries are additional requirements for bed escape *lifts*; *bridge* escape routes; *circ*ulation space; hospital *streets*; *pro*tected escape routes; *enc*losed roof escape routes; *unenc*losed *roof* escape routes; *single* direction of escape; *stair*ways)
Definition: Ap 1; 17.4/6; 17.27; 17.36
  Circ: Ap 1; 17.26/27
  Prot: Ap 1
  Stair: Ap 1; 18.3; 18.12
  Street: Ap 1
General: 17.1/5; 17.12
  Circ: 17.1/2
  Lift: 18.1; 18.40
  Stair: 7.9; 18.1
  Street: 16.1/5
Access room: see separate entry
Access through stairway: 18.15
Accessibility to/from certain rooms: 14.13; 15.4; 17.16
Acceptability
  Sing: 17.13; 17.17
Accommodation
  Bridge, roof enc: 17.60
  Prot: 18.16
  Sing: 17.17; 17.37
  Street: 16.19
Angle of divergence of exit: 17.17
Assembly room: see separate entry
Balustrade
  Unenc roof: 17.56
Basements
  Stair: 16.12; 16.16/18; 18.12/13; 18.23
Bed escape lifts: 18.47
Bridge escape route: see separate entry
BS 5588
  Stair: 19.4/5
Building Regs
  Prot: 18.16
  Stair: 18.19
Cavity barriers: 17.61
Ceiling void: 17.61/66
Circulation space: see separate entry
Combustible materials
  Street: 16.4
Compartment: 17.14
Courtyards: 17.24/25
Cupboard doors: 20.10
Departments, certain: 8.3/4; 8.11/12; 9.2
Design
  Street: 16.6/22
Designed as a compartment
  Street: 16.1; 16.7

Distance apart
Stair: 16.10/12; 18.35
Doors across: 20.11; 20.13
Street: 16.6; 16.8; 17.9; 20.17; 20.22
Doors to: 14.1; 17.6; 17.8/10; 17.16; 18.16; 20.9/10; 20.13
Bridge, enc roof: 8.5; 8.13; 9.5; 17.9; 17.46; 17.59/60; 20.22
Circ: 8.17; 17.9; 17.16/18; 20.10; 20.17
Lift: 18.44/45
Prot: 18.16
Sing: 17.17/18; 20.11
Stair: 18.11; 20.17; 20.19; 2.26
Street: 16.5; 9.5
Unenc roof: 17.9; 17.46
Door recesses
Circ, sing: 17.19/23
Drawings: 23.6/7
Electrical equipment, cables: 15.9; 15.12
Enclosure
Stair: Ap 1; 18.14/15
Engineering services
Lift: 18.48
Exits: 17.11; 17.14/17; 17.42/47 and see separate entry
Bridge, enc roof: 8.5; 8.7; 8.13/14; 9.5; 17.59
Prot: 18.11; 18.16; 19.3
Sing: 16.10; 17.80
Stair: 8.6/7; 8.11; 8.13/14; 8.25/26; 8.28; 8.28; 16.12; 18.17
Street: 8.5; 8.13/14; 8.22; 8.25/26; 9.5; 9.16; 16.1; 16.5; 16.8/18; 17.79/80
Unenc roof: 8.5; 8.13/14; 8.22; 8.25/26; 9.5; 9.16; 17.56; 17.64; 17.79/80
External escape route: see separate entry
Fire alarm
Stair: 19.1/4
Street: 16.9
Fire Brigade use
Street: 16.3
Fire fighting stairway: 19.1/5
Fire hazard rooms: 14.1
Circ: 14.5; 14.7
Sing: 17.17/18
Fire load/risk
Circ: 17.35
Street: 16.21
Fire practice note
Lift: 18.48
Fire resisting construction: 18.47
Bridge, enc roof: 8.5; 8.13
Prot: 18.16; 18.47
Sing: 17.17/18
Street: 8.5; 8.13; 16.7/8; 9.5
Fire risks below: 17.61
Floors: 16.7; 17.39
Unenc roof: 17.56
Geriatric ward
Circ: 17.34
Glazing, glazed screens: 20.13
Circ: 10.10; 13.4; 14.7
Sing: 10.10; 13.4; 14.7; 17.17
Stair: 18.11
Ground storey level
Sing: 16.13
Stair: 16.10; 18.12; 19.2/3
Hazardous activities near: 17.16
Height: 15.13; 17.40
High rise hospitals: 11.7; 11.10
Hold open devices to doors
Street: 20.17
Hospital street: see separate entry
Hospitals with/without hospital street
Street: 8.3/15
Inner rooms: see separate entry
Lifts: 18.47
Street: 18.38; 18.43
Lighting: 17.46/47
Bridge, enc roof, unenc roof: 17.46
Linking corridor: see separate entry
Local Fire Authority
Stair: 11.7; 18.12
Location
Lift: 18.42
Stair: 8.13; 18.10
Matresses
Stair: 16.10; 17.59/60; 18.17/19
Mental illness ward
Circ: 17.34
Measurement points
Sing: 17.70/71
Number
Lift: 18.41
Stair: 18.2; 18.5/9
Number of users: 17.28/33; 17.41; 17.77
Street, Stair: 18.6/9
Obstruction: 8.23; 17.36; 20.10
Prot: 18.16
Stair: 18.18
Open areas off
Circ, sing: 17.34/38
Openings
Stair: 18.14
Overnight stay rooms
Sing: 17.17/18
Patient accommodation
Sing: 17.17/18
Phased developments: 17.67
Plant rooms: 15.13; 15.15; 17.58
Sing: 15.14/16
Progressive horizontal evacuation: 17.3 and see separate entry
Street: 16.2
Protected corridor: 14.1
Protected escape route: see separate entry
Protected lobby: 8.6; 18.26
Circ: 18.26/27; 18.29
Lift: 18.30; 18.43/46
Prot: 18.16; 18.47
Stair: 16.8; 18.11; 18.20/21; 18.23; 19.2/3; 19.5
Street: 18.21/24; 18.26
Protected shaft
Lift: 18.43/44
Stair: 18.4; 18.11
Street: 16.20; 18.21; 18.23; 18.24
Ramps: 17.4/5; 17.39; 17.52
Roof escape route, enclosed: see separate entry
Roof escape route, unenclosed: see separate entry
Roof lights
Unenc roof: 17.56
Roof plant & tanks
Stair: 17.58
Roof space: 17.61/66
Rooms
Sing: 17.15; 17.17/18
Rooms not accessible from: 14.13; 15.4; 17.16
Room route: 17.4/5
Route: 17.4/11
Prot: 18.16; 19.3
Sanitary accommodation
Street: 16.19
Signs
Lift: 18.45
Single direction of escape route: see separate entry
Single/alternative direction of escape junction: 17.17
Small detached hospital extensions
Circ, stair, street: 8.26/27
Smoke control
Street: 16.4/5; 16.9
Special precautions
Sing: 17.17/18
Staff use only: 17.6/7; 17.57/58; 17.61/66; 18.13
Unenc roof: 17.57/58
Stairways: see separate entry
Steps
Stair: 18.17; 18.19
Storeys served
Lift: 18.41; 18.43
Stair: 16.11/12; 16.15/16; 18.6/9; 18.11/12; 19.1/2
Sub-compartments: 9.2; 17.14
Subdivided
Street: 16.8/9
Surfaces: 11.26
Tank room: 15.15; 17.58
Travel distance: see separate entry
Ventilation
Street: 16.4; 16.9

Ventilation: 17.55/56
Stair: 18.14; 18.33
Walls
Stair: 18.11; 18.14
Ward bedrooms
Circ: 8.21/23; 17.26
Wet and dry risers
Street: 16.22
Width: 17.28/33; 17.41; 17.77
Circ: 17.28/33; 17.38; 17.41; 17.76
Stair: 17.76; 18.17/19
Street: 16.6
Unenc roof: 17.56; 17.58
Windows
Stairs: 18.11

Escape Stairway
(See Stairway)

Evacuation
Alternative means of escape: 17.12 and see separate entry
Fire evacuation plan: see separate entry
High rise: 11.4/7; 11.10
Mattresses: 16.10; 17.59/60; 18.17/19; 18.31
Progressive horizontal evacuation: see separate entry
Total evacuation: 7.6/7; 17.48
Vertical: see Lifts; Stairways

Existing Buildings
DHSS submission: 11.7
Guidance on: 2.2/5
Sharing escape with new building: 5.1; 11.7
Which excluded: 2.5

Exits
Definition of Final Exit: Ap 1
Additional from certain depts: 9.13/14
Assembly rooms: 9.13; 17.73/75; 17.81
Basements: 16.16
Bridge escape route: 8.5; 8.13/14; 9.5; 17.59
Circulation space: 17.26
Compartments: 8.5/8; 8.13/14; 8.21/23; 8.26/27; 9.5; 9.16; 16.5; 16.8/12; 17.14
Courtyards: 17.24/25
Escape route final exit: 17.5; 17.9; 17.11
Final exits: 4.9; 8.5; 8.13; 8.22; 8.25; 9.5; 9.16; 11.7/8; 16.7; 16.10; 16.12; 16.13/15; 16.16; 16.18; 17.5; 17.9; 17.11; 17.42/47; 17.64; 17.74; 17.79; 18.11/12; 18.17; 19.3
Fire fighting stair final exit: 19.3
Fire resisting construction between: 17.15
Floors level at final exit: 17.42/44
Hazardous areas: 17.16
Hospital street: 8.5; 8.13/14; 8.22; 8.25/26; 9.5; 9.16; 16.1; 16.5; 16.8/18; 17.79/80
Lighting at final exit: 17.46/47
Linking corridors: 4.9
Local fire authority consultation: 18.12
Location in rooms: 17.15
Location in compartments & sub-compartments: 17.14
Location of final exit at different levels: 18.12
Marking and fastening: 3.3
Mattresses: 18.17
Number of users: 9.13; 17.75
Opening at final exit: 17.45
Plant rooms: 15.14/15
Protected escape route: 18.11; 18.16; 19.3
Ramp at final exit: 17.42/43
Roof escape route, enclosed: 8.5; 8.7; 8.13/14; 9.5; 17.59
Roof escape route, unenclosed: 8.5; 8.13/14; 8.22; 8.25/26; 9.5; 9.16; 17.56
Roof space: 17.62/65
Room occupants' exit: 17.17
Small detached extensions: 8.26/29
Stairways: 8.6/7; 8.13; 16.8; 16.12; 18.11/12; 18.17; 18.25
Step at final exit: 17.42/44
Sub-compartments: 9.5/6; 17.14
Travel distance: 8.25; 9.16; 11.7/8; 16.12; 17.15; 18.35
Wards: 8.21/23

Expansion joints
Compartment walls: 8.18
Pipes: 11.39

Explosive materials storage
Fire certification: 3.1

Extensions, hospital
DHSS submission: 11.7
Small detached: 8.26/29
Stairway numbers: 18.5/9
Travel distances in: 8.25; 11.7/8
With streets: 8.3/9
Without streets: 8.10/15

External areas
(See Courtyards)

External assembly point/position
(See Assembly point/position)

External escape routes
External walls near: 17.54
Floor surface: 17.50
Glazing near: 17.54
Lighting: 17.53
Ramps: 17.51/52
Road crossing: 17.51
Route to external assembly positions: 17.48/49
Steps avoided: 17.44; 17.50
Ventilation extracts near: 17.55
Windows near: 17.54

External walls
Building Regs: 17.54
Doors: see separate entry
Element of structure: 17.54
External escape route near: 17.54
Fire resisting/incombustible construction: 11.12; 17.54; 17.56; 17.58
Glazing: 18.11; 18.34
Horizontal projections: 11.11
Openings: 6.2; 11.14
Re-entrant angle: see separate entry
Roof below: 11.14
Roof escape route near: 17.56; 17.58
Separates compartments: 11.12
Separation of buildings requirement: see separate entry
Stairway enclosure: 18.11; 18.14
Tower and podium: 11.13/14
Unprotected areas; etc: Ap 1; 6.2; 11.14; 11.17/20; 17.54; 17.56
Windows: see separate entry
Other requirements: see Walls

Extinguishers
(See First aid fire fighting equipment)

F

Factories
Fire certification required: 3.1
Health & Safety Executive notified: 3.4
Number of occupants: 3.1

Final exit
(See Exit)

Finishes
(See Surface spread of flame)

Finishing kitchens
Fire hazard room: 14.8

Fire
Atria: 11.44
Basements: 11.15
Cables: 15.12
Cavity barriers: 11.34
Ceilings: 11.11; 11.32
Classes: 21.3
Compartment: 8.14; 11.17; 20.1
Different parts of hospitals: Ap 2
Doors: 20.1/2
Elevations, spread across: 11.11; 11.17
Evacuation: 7.4/9
Fire risk separation: 6.1/6

Geriatric wards: 13.2
High buildings: 11.2/3
Hospital streets: 16.2/3
Lift rendered unusable: 18.42
Mental illness wards: 13.2
Protecting structure, spread: 11.17
Roof: 11.13
Stairways: 18.1/2
Sub-compartments: 11.17; 20.1
Transfer grilles: 22.20
Ventilation, spread by: 22.2; 22.5/6
Wall linings: 11.11
Wards: 13.1/2
Windows spread: 9.11; 11.3; 11.11
Other references: see following entries

Fire alarm and detection systems
General: 21.1
Basements: 11.16
Building Regs: 22.17
Call points: 17.63; 20.16/18
Door closers: 20.16; 22.7
Door locks: 17.45
Extinguishers activated: 21.13
Fire alarm zone: 20.18; 22.27
Fire hazard rooms: 22.21
Heat detector: 20.18; 22.17
Hospital street: 16.9
HTM 82: 20.18; 21.2; 22.27
Inner rooms: 17.6
Pressurization activated: 16.9
Roof space: 17.63
Shutters activated: 22.6; 22.20; 22.17
Sounders: 17.63
Smoke detectors: 20.16; 20.18; 22.7; 22.17
Ventilation activated: 16.9; 22.7
Zones: 20.18

Fire assessment
Doors: 20.7

Fire blankets
(See First aid fire fighting equipment)

Fire brigade
Basements: 11.15/16
Communication with: 21.1
Department access: 16.3
Fire drawings: 23.1/2
Fire fighting appliances: Ap 5; 4.12; 5.4; 19.2
Fire fighting lifts: 19.4/5
Fire fighting stairways: 19.1/4
Fire hydrant locations: 21.23/25
Hospital access: 5.4; 16.3; 19.1/5
Hospital street: 16.3
Reliance on: 1.5
Site access: Ap 5; 4.12; 5.4; 21.24/25
Stairways: 19.1/5
Water supply: 5.4
Wet and dry risers: Ap 5; 5.4; 16.22; 21.24; 21.26/29
Other requirements: see Local fire authority, Health & safety executive

Fire brigade appliances
(See Fire brigade)

Fire certificate
Concode requirement: 4.1
Fire tests: see separate entry
Home Office requirement: 3.1

Fire detection systems
(See Fire alarm and detection systems)

Fire drawings
(See Drawings)

Fire engine/fire fighting appliance
(See Fire brigade)

Fire escape exit
(see Exit)

Fire escape stairway
(See Stairway)

Fire evacuation plan/strategy
Drawn up: 5.1
Hospital streets required: 8.10
Stairways: 18.7

Fire extinguishers
(See First aid fire fighting equipment)

Fire fighting
Basements: 11.15/16
Fire brigade: see separate entry
Fire Precaution Regs: 3.3
First aid fire fighting equipment: see separate entry
Fixed fire fighting equipment: see separate entry
Local fire authority: see separate entry

Fire fighting appliances
(See Fire brigade)

Fire fighting equipment
(See Fire brigade; first aid fire fighting equipment; Fixed fire fighting equipment)

Fire hazards
Fire hazard rooms: see separate entry
Furnishings: 17.35
Hazardous areas: 14.9/14; 15.3/5; 17.16; 22.2

Fire hazard rooms
General: 10.1; 14.1
List of rooms: 14.7/9
Access room: 17.5
Ceilings: 14.3
Circulation space: 14.5; 14.7
Compartmentation requirements reduced: 8.4; 8.12; 14.1
Doors: 14.4; 20.22
Door closers: 14.4
Escape route location: 14.1
Fire alarm and detection: 22.21
Fire resisting construction: 14.1/3; 14.8
Fire stopping: 10.7; 13.2; 14.2/3
Glazing and glazed screens: 14.6/7; 10.10
High rise hospitals: 11.7
Location: 14.5
Mechanical services: 14.3; 22.12/15; 22.17
Open areas: 17.34
Possible risks enclosed: 10.1
Single direction of escape route location: 17.17/18
Walls: 14.2/8
Other requirements: see Rooms

Fire hydrant systems
(See Fixed fire fighting equipment)

Fire lift
(See Lift)

Fire load
Definition: Ap 1
General: 6.1/8
Areas off circulation: 17.35
Fire risk: see separate entry
High fire load: see below
Hospital street: 16.21
Life risk: see separate entry
Risk categories: Ap 3
Vertical fire spread: 11.11
High fire load
Definition: Ap 1; 6.7
Combustible materials: 6.7
Fire resisting construction: 6.2; 10.1
Fire risks relationship: 6.1/8
Fixed fire extinguishing: 21.15; 21.17
Progressive horizontal evacuation: 8.4; 8.12
Protected lobbies: 18.25
Risk categories: Ap 3

Fire notices
(See Signs)

Fire practice notes
No 1 – Laundries: 14.11
No 2 – Storage of flammable liquids: 14.10
No 3 – Lifts as a means of evacuation: 18.48
Read in conjunction with HTM 81: Ap 6

Fire resistance
Definition: Ap 1
(See Fire resisting construction)

Fire resisting
Definition: Ap 1
(See Fire resisting construction)

Fire resisting construction
Definition of fire resistance: Ap 1
Definition of fire resisting: Ap 1
General: 6.2; 10.1
Access panels: 20.22
Alternative exits separated: 17.15
Basements: 11.16; 12.2; 15.3
Biological hazard areas: 14.9
Bridge escape route: 8.5; 8.13
Building Regs: 8.19; 18.4
Car parks: 12.2; 12.6
Ceilings: 9.9/11; 10.7; 11.30/32; 14.3; 20.22
Compartment walls: 8.16; 8.18/19
Coronary care unit: 8.19
Doors: 8.5; 8.13; 9.5; 10.5; 10.8; 14.3; 18.16; 18.29/30; 18.44; 20.1; 20.7; 20.22
Ducts and shutters: 18.4; 22.3; 22.8/11; 22.17
Eaves: 9.11
Elements of structure: see separate entry
Exit separation: 8.5; 8.13; 17.15
Expansion joints: 8.18
External escape route: 17.54
Fire hazard rooms: 14.1/3; 14.8
Fire risk/load and life risk separation: 6.2; 10.1
Floors: 11.31; 12.6
Geriatric wards: 13.2
Glazing and glazed screens: 10.6; 10.10; 13.3/4; 17.17
Hospital streets: 8.5; 8.13; 9.5; 16.1; 16.7/8
Intensive therapy: 8.19
Laboratories: 14.9
Life and fire risk/load separation: 6.2; 10.1
Main entrance hall: 16.1
Mental illness wards: 13.2
Neo natal unit: 8.19
Non-combustible materials: see separate entry
Openings: 10.9
Operating theatre depts: 8.19
Plant rooms: 15.2/3
Protected lobbies: 10.5; 18.28/34; 18.44
Protected shaft: 18.4; 18.16
Radio isotopes: 14.9
Roof: 11.13/14; 12.6; 17.56
Roof below: 11.14
Roof escape route, enclosed: 8.5; 8.13
Roof escape route, unenclosed: 17.56
Services accommodation: 14.9
Single direction escape route: 17.17/18
Solid masonry walls: 8.16; 8.19; 9.8; 18.4; 18.28
Structural fire precautions: see separate entry
Sub-compartments: 9.5; 9.7/14
Sub-compartment walls: 9.7/8
Switchgear rooms: 15.8
Transfer grilles: 22.19/20
Under building: 12.2
Walls: 8.16/19; 9.5/14; 10.2/4; 10.7; 11.7; 11.12; 17.54; 17.56; 17.58; 18.28
Windowless accommodation: 11.16

Fire risks
Areas off circulation: 17.35
Basements: 11.16
Consult authorities and users: 21.10
Escape routes above: 17.61
Explosive or flammable storage: 3.1
Fire load: see separate entry
High buildings: 11.7; 11.13
High fire risk: see below
Life risk, fire load relationship: 6.1/8
Life risks: see separate entry
Risk categories: Ap 3
High fire risk
Definition: Ap 1; 6.6
Basement: 11.16
Fire resisting construction: 6.2; 10.1
Progressive horizontal evacuation: 8.4; 8.12
Protected lobbies: 18.25
Risk categories: Ap 3
Smoke and fire spread: 6.6

Fire sealing
Lift mechanisms: 18.30

Fire stopping
Definition: Ap 1
Building Regs: 11.34/35; 22.24
Cables: 9.8; 11.35; 22.25
Compartment walls: 11.31
Conduits: 9.9; 11.35; 14.3
Drainage pipes: 11.38
Ducts: 9.8; 11.35; 22.24/25
Engineering terminals: 9.8
Geriatric wards: 13.2; 22.25
Mental illness wards: 13.2; 22.25
Pipes: 9.8/9; 11.35; 11.38; 14.3; 22.24/25
Services: 9.8/9
Walls: 9.8; 10.7; 11.31; 13.2; 14.2/3

Fire strategy
(See Fire evacuation plan/strategy)

Fire symbols: 23.8

Fire tests
Doors: 20.7
Fire certificate: see separate entry
Substrates and coatings: 11.28
Surface spread of flame: 11.23
uPVC pipework: 11.38

Fire aid fire fighting equipment
General: 21.1
BS 4547: 21.3
BS 5306: 21.5; 21.8; 21.11
BS 5423: 21.9
Classes of fire: 21.3
Drawings: 23.7
Extinguishers: 5.4; 11.16; 21.1; 21.4; 21.6/12
Fire blankets: 21.1; 21.12
Hose reels: 21.1; 21.4; 21.5; 21.12/13; 21.27
Laboratories: 21.10
Water: 21.3/5; 21.9

Fittings
General: 11.40/41
Ceilings: 9.9; 11.30; 14.3
HTM 87: 11.41
Lighting: see separate entry
Notice board surfaces: 11.26
Protected lobby location: 18.32

Fixed fire fighting equipment
General: 21.1; 21.13/16
BS 5306: 21.18; 21.21/22; 21.27
Car parks: 21.17
Computer suites: 21.19
Detector activates: 21.13
Drawings: 23.5/7
Fat fryers: 21.20
Fire hydrants: 21.22/25
Foam: 21.1; 21.19/21; 21.22; 21.29
Gas flooding systems: 21.1; 21.14; 21.19/21
Halon 1301: 21.20
Landing valve: Ap 1; 21.27/28
Local fire authority consulted: 21.16
Oil storage: 2.14; 21.19; 21.29
Oil tanks: 21.19
Sprinklers: 6.2; 12.2; 12.5; 21.1; 21.17/18
Switchgear: 21.19
Water supplies: 21.22
Wet and dry risers: Ap 5; 5.4; 16.22; 21.24; 21.26/29

Fixtures
General: 11.40/41
HTM 87: 11.41

Flame retardants
Spread of flame: 11.24/25

Flammable liquids
Electrical equipment containing: 15.3; 15.9
Fire fighting: 21.4

Flammable materials
Fire Practice Note 2: 14.10
Fire risk: Ap 3; 3.1
Statutory regs: 14.12
Storage: Ap 3; 3.1; 14.10; 14.12

Flash-over
Definition: Ap 1

Flats/maisonettes
Purpose group: 4.10

Floors
Compartment floors: see separate entry
Escape routes: 17.39
External escape route: 17.44; 17.50
Ramps: see separate entry

Foam inlets
(See Fixed fire fighting equipment)

Furnishings
General: 13.1
Circulation space: 17.35
Fire risk/load: 17.35
HTM 87: 11.41
Protected lobbies: 18.32

Furniture
General: 11.40; 13.1
Fixed in assembly rooms: 17.78
HTM 87: 11.41
Protected lobbies: 18.32

Fusegear cupboards
(See Switchroom)

G

Gas flooding extinguishers
(See Fixed fire fighting equipment)

Gas storage
Cylinders & manifold room: 14.10
Risk category: Ap 3
Statutory regs: 14.12

Gases
(See Toxic gases; Gas storage)

Generator rooms
(See Plant room)

Geriatric wards, acute: 13.1

Geriatric wards, non-acute
Ceilings: 13.2; 22.16
Doors: 13.2; 20.13; 20.22
Ductwork and shutters: 22.15/16; 22.25
Fire, smoke, toxic gas spread: 13.2
Fire stopping: 13.2; 22.25
Number of patients: 13.2
Open areas off circulation: 17.34
Transfer grilles: 22.19/20
Vision panels in doors: 20.13
Walls: 10.7; 13.2; 22.16
Other requirements: see Wards

Glass
(See Glazing)

Glazed screens and panels
Between bedrooms: 10.10; 13.3/4; 17.17/18
Ceilings: 14.3; 14.6
Circulation space: 10.10; 13.4; 14.7
Compartment walls, subcompartment walls, protecting structure: 14.7
Fire hazard room: 10.10; 14.6/7
Fire resisting construction: 10.10; 13.3/4
Plastics materials: 11.29
Protected lobby: 14.7; 18.34; 18.45
Single direction of escape route: 10.10; 13.4; 14.7; 17.17
Timber frames: 10.10
Wards: 10.10; 13.3/4; 17.17/18
Other requirements: see Glazing

Glazing
BS 476: 10.10; 13.3/4; 14.7; 17.17; 17.54; 20.7
Doors: 14.4; 18.11; 18.34; 18.45; 20.7; 20.13
External escape route near: 17.54
External wall: 18.11; 18.34
Fire hazard rooms: 14.7
Fire resisting construction: 10.6; 10.10; 13.3/4; 17.17; 17.54
Glazed screens: see separate entry
Inner/access rooms: 17.6; 20.13
Overnight stay rooms: 10.10; 17.17/18
Plastics materials: 11.29
Protected lobbies: 14.7; 18.34; 18.45
Protected shafts, stairways: 18.11
Radiation: 10.10
Sleeping accommodation: 10.10; 17.17/18
Vision panels in doors: see separate entry
Walls; 10.6
Windows: see separate entry
Wire cast: 11.42

Glossary of terms: Ap 1

Ground storey, ground level storey
Definition: Ap 1, 18.12
Basement storey: see Basement
Bed lift: 18.41 and see Lifts
External escape routes: 17.48/55
Final exits: 16.3; 16.10; 16.12/13; 18.12
Hospital street: 16.3; 16.10/13
Plant rooms: 15.3
Protected escape route from lift: 18.47; 19.3
Protected lobby: 18.43
Single direction of escape: 16.10; 16.13
Stairways: 16.3; 18.9; 18.12; 19.2
Upper storey: see Storey levels
Other requirements: see Storey levels

Gymnasium
Number of patients: 9.13

H

Halls, assembly
(See Assembly hall)

Hazards
(See Fire hazard rooms; Fire hazards)

Hazardous areas and activities
Doors: 17.16
Drawings: 23.5; 23.7
Health & Safety Executive requirements: 11.43
Local fire authority consulted: 21.16
Ventilation: 22.2

HBN 40
"Common activity spaces — Vol 2: corridors": 17.41

Health and safety executive
Consulted: 3.4; 5.6
Safety requirements: 11.43

Health building
Definition: Ap 1
Life and fire risk categories: Ap 3

Health centre
Risk category: Ap 3

Health technical memorandum
(See HTM)

Height
(See Size)

High buildings
(See High rise hospitals)

High rise hospitals
General: 11.1/5
Atria: 11.44
Compartments: 11.6/7; 11.10
Drawings: 11.7
Fire and smoke spread: 11.2/3
Fire appliance access: Ap 5
Fire hazard rooms: 11.7
Fire risks: 11.7; 11.13
Fire spread on elevations: 11.11/12
Hospital street: 11.7
Life risks: 11.4; 11.13
Plant room fire resisting period: 15.3
Protected lobbies in buildings over 18m: 18.20/22; 18.26/27
Protected lobbies in buildings under 18m: 18.23/27
Protected shaft: 11.7
Size of storey: 11.5
Stairways: 18.6/9
Sub-compartments: 11.6/7; 11.10
Submission to DHSS: 11.7
Tower and podium configuration: 11.13/14
Travel distance in stair: 11.7/8; 11.10; 16.12
Wards and departments: 11.7; 11.10
Wet and dry risers: 21.26/28

Hoist
Enclosure governed by Fire Precautions Regs 1976: 3.3
Protected lobby to shaft: 18.23

Home office
"Draft guide to fire precautions in hospitals (existing)": 2.1
Fire Services Inspectorate certification: 3.1

Horizontal evacuation
(See Progressive horizontal evacuation)

Hose reels
(See First aid fire fighting equipment)

Hospital building note
(See HBN)

Hospital design note
No 2 superseded: 1.1

Hospital extensions
(See Extensions, hospital; Small detached hospital extensions)

Hospital sterilizing & disinfecting unit (HSDU)
Risk category: Ap 3

Hospital street
Definition: Ap 1
Designed as escape route: 17.4/5
General: 16.1/5
Accommodation: 16.19
Combustible materials: 16.4
Design: 16.6/22
Designed as compartment: 16.1; 16.7
Doors across: 16.6; 16.8; 17.9; 20.17; 20.22
Doors to: 16.5; 9.5
Drawings: 23.6
Exits: 8.5; 8.13/14; 8.22; 8.25/26; 9.5; 9.16; 16.1; 16.5; 16.8/18; 17.79/80
Fire alarm: 16.9
Fire brigade use: 16.3
Fire load: 16.21
Fire resisting construction: 8.5; 8.13; 16.7/8; 9.5
Floors: 16.7
High rise hospitals: 11.7
Hold open devices to doors: 20.17
Hospitals with: 8.3/9
Hospitals without: 8.10/15
Lifts: 18.38; 18.43
Main entrance hall separation: 16.1
Progressive horizontal evacuation: 16.2
Protected lobbies: 18.21/24; 18.26
Protected shafts: 16.20; 18.21; 18.23; 18.24
Sanitary accommodation: 16.19
Small detached hospital extensions: 8.26/27
Smoke control: 16.4/5; 16.9
Stairways: 16.10/18; 18.8; 18.11/12
Subdivided: 16.8/9
Travel distance: 16.8
Ventilation: 16.4; 16.9
Wet and dry risers: 16.22
Width: 16.6

Hospital technical memorandum
(See HTM)

Houses
(See Dwelling houses)

HTMs
Draft 'Fire Safety in Health Buildings' superseded: 1.1
HTMs 7 & 11: 15.7
HTM 16: 1.1
HTM 81: 1.1/6; 2.1/8; 4.11; 11.21; 11.43
HTM 82: 1.6; 20.18; 21.2; 22.27
HTM 83: 1.6
HTM 87: 1.6; 11.41

I

Identification disc
Doors: 20.8

IEE regulations
(See Legislation)

Incinerator room
(See Plant room)

Inner rooms
Definition: Ap 1
Part of escape route: 17.4/6
Doors: 17.6; 20.13
Escape route: see separate entry
Fire alarm and detection: 17.6
Travel distance: 17.72
Vision panels: 17.6; 20.13
Other requirements: see Rooms

Integral buildings
Definition of: 4.7/9

Intensive therapy unit
Bed lifts: 18.41
Coronary care unit: see separate entry
Number of patients: 8.19
Risk category: Ap 3
Solid masonry walls: 8.19

Internal surfaces
Class of surface: 11.11; 11.22/27
Surface spread of flame: see separate entry
Thin materials and coatings: 11.28

Intumescent coatings
To glazed screens: 10.10

Ironmongery
Building Regs: 18.11
Client agreement: 20.20; 22.26
Doors and doorsets: see separate entry
Fastening: 3.3
Fire hazard rooms: 14.4
Hold open devices: 20.4/5; 20.16/20
Hold open devices, electromagnetic/mechanical: 18.11; 20.5; 20.16/17; 22.27

Hospital streets: 20.17
Identification discs: 20.8
Lock: 17.25
Lock available on one side: 17.16; 20.16; 20.21
Lock triggered by fire alarm/detector: 17.45
Locks, none to some doors: 8.23; 17.8/10; 17.24; 17.45; 17.60
Panic bars: 20.21
Self closers: 10.8; 12.3; 14.1; 14.4; 16.20; 17.16; 18.11; 20.2/3; 20.5; 20.15; 20.20
Side hung, pivoted doors: 20.9

Isotope storage
(See Radio isotopes)

K

Kitchen
Drawings: 23.5
Fat fryer fire fighting: 21.20
Fire hazard rooms: 14.8
Located close to life risk areas: 6.2
Risk category: Ap 3

Kitchenette
Not fire hazard room: 14.8

L

Laboratories
Doors open out: 14.14
Escape route for patients accessibility: 14.13
Extinguishers: 21.10
Fire hazard rooms: 14.7/8
Fire resisting construction: 14.9
Health & Safety Executive requirements: 11.43

Ladders
Basement level areas: 18.13
Roof plant: 17.58

Landings
(See Stairways)

Laundry
Fire hazard room: 14.7/8
Fire Practice Note: 14.11
Risk category: Ap 3

Lecture room
Assembly room requirements: 17.73
Fire hazard room: 14.8

Legislation
Building Regs: see separate entry
Fire Precautions Act 1971: 3.1/2
Fire Precautions Regs: 3.3
Flammable materials: 14.12
Gases: 14.12
HTM 81 relationship: 1.3
IEE regulations: 15.7/8
Legislation affecting fire: 4.5
Local acts: 4.4
Radio isotopes: 14.12
Storage: 14.12

Library
Fire hazard room: 14.8
Numbers of occupants vary: 17.30

Life risks
Ductwork: 22.17
Electrical equipment: 15.9
Fire resisting construction: 6.2; 10.1
Fire risks/fire load relationship: 6.1/8
High buildings: 11.4; 11.13
High life risk: see below
Kitchen location: 6.2
Low life risk. see below
Pharmacy location: 6.2
Risk categories: Ap 3
Smoke and fire spread: 18.42
High life risk
Definition: Ap 1; 6.5
Relation to fire risks/loads: 6.1/8
Risk categories: Ap 3
Low life risk areas
Definition: Ap 1; 6.4
Location: 6.4
Risk categories: Ap 3

Lift
General: 18.1
Bed escape lift: see below
Enclosure: 3.3; 16.1; 16.8
Fire fighting lift: see below
Fire sealing to lift mechanisms: 18.39
Hospital streets: 16.8; 18.38 and see bed escape lift below
Lift machine room: see Plant room
Lift motor room compartmented: 18.39
Protected lobbies: 18.23; 18.38 and see bed escape lift and fire fighting lift below
Protected shaft: 18.4; 18.21; 18.37 and see bed escape lift below
Bed escape lift
General: 7.9; 18.1; 18.40
Doors: 18.44/45
Drawings: 23.7
Engineering services: 18.48
Escape route: 7.9; 17.4/5; 18.47
Fire Practice Note: 18.48
High rise hospitals: 11.7; 11.10
Hospital street: 18.43
Location: 18.42
Number: 18.41
Protected lobbies: 18.30; 18.43/46
Protected shaft: 18.43/44
Signs: 18.45
Stairways: 18.7
Storeys served: 18.41; 18.43
Fire fighting lift
Definition: Ap 1
BS 5588: 19.5
Drawings: 23.6/7
Protected lobbies: 19.5

Lift machine room
(See Plant room)

Liftways
(See Lift)

Lighting
Ceilings: 9.9; 11.30; 14.3
Escape, to BS 5266: 21.30
Exits: 17.46/47
External assembly position: 17.53
External escape routes: 17.53

Lightwells
(See Courtyards)

Linen store
Fire hazard room: 14.8

Linking corridor
Separate building link: 4.9; 8.27
Other requirements: see Escape route

Living accommodation
Surfaces: 11.26

Loads
(See Fire loads)

Lobby
(See Protected lobby)

Local authority
Assembly positions on public road: 17.48
Fire hydrant provision: 21.23

Local fire authority
Assembly points on public road: 17.48

Consultation: 2.8; 4.4; 5.2/4; 11.7; 11.16; 13.1; 16.22; 17.48; 21.10; 21.16; 27.23
Doors in wards: 13.1
Final exits at different levels: 18.12
Fixed fire fighting equipment: 21.16
Special risk areas: 21.10
Submission when stair travel over 45m: 11.7
Transfer grilles location: 22.23
Wet & dry riser location: 16.22
Other requirements: see Fire brigade; Health and safety executive

Lock
(See Ironmongery)

Locker rooms
Fire hazard room: 14.8

Luminaires
(See Lighting)

M

Main communication route
(See Hospital street)

Main electrical gear
(See Switchroom)

Main entrance hall
Hospital street separation: 16.1

Main kitchen
(See Kitchen)

Main store
Risk category: Ap 3
Other references: see Storage

Maintenance
Basement level external areas: 18.13
Courtyards access: 17.25
Roof space access: 17.61

Maisonettes
(See Flats/maisonettes)

Management
Conterminous with compartment and subcompartment: 8.24; 9.15
Outpatients department: 9.14
Staff training: 7.6/7; 8.23

Maternity ward/nursing section
Delivery suite: Ap 3
Neo natal unit: see separate entry
Risk category: Ap 3
Other requirements: see Wards

Mattress evacuation
Protected lobbies: 18.31
Stairways: 16.10; 17.59/60; 18.17/19

Means of escape
Definition: Ap 1
General: 1.1/5; 4.2/3; 6.1; 7.1/2; 17.1/3; 17.12
Assembly rooms: 17.73/81
Basements: 11.16
Codes of practice: 8.4; 8.12
Compartments: 8.1/15; 8.25; 17.14 and see separate entry
Consultation with client: 5.1; 5.5
Courtyards: 17.24/25
Certain departments: 8.19; 9.13/14
Doors: 20.9/13 and see separate entry
Escape routes: see separate entry
Evacuation: see separate entry
Exits: 17.16; 17.42/47 and see separate entry
External escape route: 17.48/55 and see separate entry
Factories, offices, shops: 3.2/3
Fire hazard rooms: 14.1/14
High buildings: 11.4; 11.6/10 and see separate entry
Hospital street: see separate entry
Lifts: 18.1/48 and see separate entry
Nucleus schemes: 2.8
Phased developments: 17.67
Plant rooms: 15.13/16 and see separate entry
Progressive horizontal evacuation: see separate entry
Roof escape routes: 17.56/60 and see separate entry
Roof space: 17.61/66
Rooms: 17.15/16
Services accommodation: 15.4/5; 15.13/16
Single direction of escape: see separate entry
Small detached extensions: 8.26/29
Stairways: 18.1/48 and see separate entry
Sub-compartments: 9.2/6; 9.16; 17.14 and see separate entry
Travel distance: see separate entry
Wards: 8.20/23; 13.1/4
Symbols for: 23.8

Mechanical services
General: 22.1; 15.1
Chased into walls: 10.3
Drawings: 23.7
Ducts: see below
Fire stopping: 9.9; 11.35
Lifts: see separate entry
Protected lobbies: 18.21; 18.24/25; 18.33
Protected shaft: 16.20; 18.21; 18.24/25
Shutters: see below
Terminal boxes: 9.8
Transfer grilles: see below
Ventilation and air conditioning: see below
Wall, floor, shaft penetration: 9.8; 9.12; 22.10/11; 22.15; 22.19/20
Ducts
Building Regs: 22.24
Cavity barriers: 22.18
Ceiling penetration: 9.9; 14.3; 22.16; 22.8
CP 413: 15.6; 22.8
Fire and smoke spread: 22.2; 22.5
Fire hazard rooms: 14.3; 22.13; 22.17
Fire resisting construction/non combustible: 9.8; 18.4; 22.3; 22.8/11; 22.17
Fire stopping: 11.35; 22.24/25
Geriatric ward: 22.15/16
Mental illness ward: 22.15/16
Protected lobbies: 18.33
Protected shaft: 18.4
Shutters: see below
Supports: 22.11
Wall penetration: 22.15
Shutters
Building Regs: 20.9
Cavity barriers: 22.18
Doors: 20.14
Ducts: 9.9; 14.3; 22.8; 22.6; 22.16
Fire alarm and detection activates: 22.6; 22.17; 22.20
Fire hazard rooms: 22.12/14; 22.17
Fire resisting construction: 22.8/11
Fixing: 22.8
Fusible links: 9.9; 14.3; 22.6; 22.12; 22.18
Geriatric wards: 22.15/16
Location: 22.9/16
Mental illness wards: 22.15/16
Transfer grilles: 22.20
Wall, floor penetration: 22.10/11; 22.15; 22.19/20
Transfer grilles
Ceilings: 22.8
Doors: 20.14; 22.22
Fire hazard rooms: 22.21
Fire resisting construction: 22.19/20
Fire, smoke, toxic gas spread: 22.20
Geriatric wards: 22.19/20
Local Fire Authority discussion: 22.23
Location: 22.19/23
Mental illness wards: 22.19/20
Shutters: 22.20
Wall, floor, shaft penetration: 22.19/20
Ventilation and air conditioning services
Basements: 11.15/16; 12.5; 12.7
Car parks: 12.5
Ducts: see above
Fire alarm/detection activates: 16.9; 22.7
Fire and smoke spread: 22.4/6; 22.2
Hospital street: 16.4; 16.9

Inlets location: 22.4
Outlets and extracts location: 11.16; 12.7; 17.55/56; 18.14; 22.7
Pressurization: 16.9
Protected lobbies: 18.33
Separate to patient areas: 22.2
Stairways: 18.14; 18.33

Medical gas store
(See Gas storage)

Medical photography
Risk category: Ap 3

Medical records
Fire hazard rooms: 14.8
Risk category: Ap 3

Medical staff room
Fire hazard room: 14.8

Mental illness ward, acute: 13.1

Mental illness ward, non-acute
Ceilings: 13.2; 22.16
Doors: 13.2; 20.22
Ductwork and shutters: 22.15/16; 22.25
Fire stopping: 13.2, 22.25
Fire, smoke, toxic gas spread: 13.2
Number of patients: 13.2
Open areas off circulation: 17.34
Transfer grilles: 22.19/20
Vision panels: 20.13
Walls: 10.7; 13.2; 22.16
Other requirements: see Wards

Mortuary and post mortem room
Risk category: Ap 3

Multi-storey hospitals
(See High rise hospitals)

N

National fire policy group
Representation on: 1.2

Neo natal unit
Bed lifts: 18.41
Number of patients: 8.19
Risk category: Ap 3
Walls: 8.19
Other requirements: see Wards

Non-combustible materials
Ductwork: 22.3 and see Fire resisting construction
Fire resisting construction: see separate entry
Roofs: 11.14 and see Fire resisting construction
Surface spread of flame: 11.24

Non-ward department
(See Department)

Notices
(See Signs)

Notice boards
Surfaces of: 11.26

Nucleus hospital
General: 2.6/8
Excepted from HTM 81: 2.1; 2.8
Stairways: 18.7
Submission to DHSS: 2.7/8

Number of patients/occupants/users/beds
Areas, rooms, spaces: 9.2; 20.12
Assembly room: 17.74/75; 17.77
Circulation space: 17.33
Compartment: 8.9; 8.15
Coronary care: 8.19
Departments, certain: 9.2
Day hospital: 9.13
Dining room: 9.13
Doors open outward: 20.12
Exits: 9.13; 17.75
Factories, offices, shops: 3.1
Geriatric wards: 13.2
Gymnasium: 9.13
High rise hospitals: 11.4
Intensive therapy: 8.19
Mental illness wards: 13.2
Neo natal unit: 8.19
Occupant capacity: see separate entry
Operating theatre: 8.19
Outpatients: 9.13/14
Patient dining room: 9.13
Protected lobby: 18.46
Rehabilitation: 9.13
Rooms, spaces, areas: 9.2; 20.12
Small detached extensions: 8.26
Stairways: 18.7/9
Storeys, upper: 18.6/9
Sub-compartment: 9.2; 9.4; 9.13
Ward: 9.2; 13.2

Nurse training school
Risk category: Ap 3

Nursing staff
(See Staff)

O

Observation panel
(See Vision Panel)

Occupant capacity
Definition: Ap 1; 17.29; 17.31
Escape route width: 17.28/33; 17.41; 17.77
Number of patients/occupants/users: see separate entry
Variability in numbers: 17.30/31
Wards: 17.30/31

Occupational therapy
Fire hazard rooms: 14.7/8
Risk category: Ap 3
Workshop fire hazard room: 14.8

Offices
Fire certification required: 3.1
Health & Safety Executive notified: 3.4
Number of occupants: 3.1

Oil fired installations
(See Plant room).

Oil storage
Fire extinguishers: 21.14; 21.19
Foam inlets: 21.29

OPD
(See Outpatients department)

Openings in walls, roofs or floors
Atria: 11.44
Doors: see separate entry
External walls: 6.2; 11.14
Fire resisting construction: 10.9
Half hour walls: 10.9
Life risk above fire risk areas: 6.2; 11.14
Roof escape route, near: 17.56
Stairways: 18.14
Sub-compartments: 9.7
Sub-compartment walls: 9.12
Unprotected areas: see separate entry
Windows: see separate entry

Operating theatre department
Bed lifts: 18.41
Number of patients: 8.19
Risk category: Ap 3
Solid masonry walls: 8.19

Other residential
Included in Institutional Purpose Group: 4.10

Out patients department
Fire hazard room: 14.7
Number of patients: 9.13/14
Number of occupants varies: 17.30/31
Risk category: Ap 3

Overnight stay rooms
Fire hazard: 14.8
Glazing to sleeping accommodation: 10.10; 17.17/18

P

Paediatric ward
Vision panel in door: 20.13
Other requirements: see Wards

Pantry
Fire hazard room: 14.8

Parking
(See Car parks)

Patients
Patient accommodaton definition: Ap 1
Atria risks: 11.44
Changes of level: 17.39; 17.44
Courtyard use: 17.25
Difficulty with doors: 14.1; 20.3/4; 20.16; 20.21
Evacuation: 5.1; 7.5; 7.9; 11.4/7; 18.1
Observation: 13.1; 17.35
Physically handicapped: 17.32; 17.44
Assisted down stairway: 7.9; 18.1

Pathology dept
Fire hazard rooms: 14.7/8
Risk category: Ap 3

Patients services
Risk category: Ap 3

Personal social services buildings
Excluded: 2.2

Pharmaceutical
Manufacturing risk category: Ap 3
Pharmacy: see separate entry
Risk category: Ap 3

Pharmacy
Fire hazard rooms: 14.7/8
Located near life risk areas: 6.2
Pharmaceutical: see separate entry
Risk category: Ap 3

Phased developments
Means of escape: 17.67

Physiotherapy rooms
Fire hazard room: 14.7/8

Pipes
Expansion joint: 11.39
Fire stopping: 9.8/9; 11.35; 11.38; 14.3; 22.24/25
Terminal boxes: 9.8
uPVC drainage: 11.37/39

Place of safety
Definition: Ap 1
Ambulance access: 17.49
Assembly points/positions: see similar separate entry
Courtyard access: 17.24
External escape route: see separate entry
Lighting: 17.53
Local authority consultation: 17.48
Local fire authority consultation: 17.48
Location: 17.48/49
Principle is travel to: 7.4; 7.6; 7.9; 17.1/3; 17.48
Public road location: 17.48

Plans
(See Drawings)

Plant rooms
Basement level: 15.3
Battery room: 15.3/5
Boiler house: see separate entry
Boiler room: 11.43; 15.3/5
Calorifier room: 11.43
Doors: 15.5
Electrical equipment room: Ap 3; 15.3/5
Escape route: 15.13; 15.15; 17.58 and see separate entry
Escape route access from other parts of building: 15.4
Fire resisting construction: 15.2/3
Fire sealing to lift mechanism: 18.30
Flammable dialectric equipment: 15.3; 15.9
Generator rooms: 15.3/5
Ground level and above: 15.3
Health & Safety Executive requirements: 11.43
High buildings: 15.3
Incinerator rooms: Ap 3; 15.3/5
Lift machine room: 15.3/5; 18.30
Lift motor room: 18.39
Oil fired installations: 15.3/5
Oil storage: see separate entry
Risk categories: Ap 3
Switch rooms: see separate entry
Tank room: see separate entry
Telephone exchange: see separate entry
Transformer room: Ap 3
Travel distance: 15.13/15

Plastics materials
Buildings Regs: 11.29
Furnishings, furniture: see separate entry
Glazing: 11.29
uPVC: see separate entry

Post graduate medical education
Risk category: Ap 3

Post mortem room
Risk category: Ap 3

Pressurization
Hospital street: 16.9

Progressive horizontal evacuation
Definition: Ap 1
Client familiarity: 5.5
Compartmentation: 7.10; 8.2/4; 8.11/12
Evacuation: see separate entry
High fire load: 8.4; 8.12
High rise hospitals: 11.6
Hospital street: 16.2
Linking corridors and separate buildings not used: 4.9
Principle of: 7.1/10; 17.3
Sub-compartmentation: 7.10; 9.1; 9.5
Vertical evacuation link: 18.1/2
Wards: 13.1/2

Protected escape route
Definition: Ap 1
Accommodation: 18.16
Building Regs: 18.16
Doors: 18.16
Exits: 18.11, 18.16; 19.3
Fire resisting construction: 18.16; 18.47
Lifts: 18.47
Obstruction: 18.16
Protected lobby/circulation space: 18.16; 18.47
Route: 18.16; 19.3
Stairway: 18.11/12; 18.16; 18.47; 19.3
Stairway exit: 18.11
Travel distance: 19.3
Other requirements: see Escape route

Protected lobby
Definition: Ap 1
General: 18.1
Accommodation in: 18.32
Accommodation off: 18.22; 18.24

Basements: 18.23
Building Regs: 18.32
Building higher than 18m: 18.20/22; 18.26/27
Building lower than 18m: 18.23/27
Circulation space: 18.26/27; 18.29
Compartments off: 18.25
Doors: 10.5; 17.9; 18.29/31; 18.34; 18.44/45; 20.6; 20.22
Enclosing structure: 18.30
Escape route through: 8.6; 18.26
Exits: 8.6; 8.28
Fire resisting construction: 10.5; 18.28/34; 18.44
Fittings, furniture, furnishings: 18.32
Glazing: 14.7; 18.34; 18.45
High fire load: 18.25
Hospital street: 18.21/24; 18.26
Lifts: 16.8; 18.21; 18.23; 18.30; 18.38; 18.43/44; 19.5
Location: 18.20; 18.26/27
Mattresses: 18.31
Mechanical services: 18.21: 18.24/25
Number of users: 18.46
Protected shaft: 18.20/26; 18.28/29; 18.33
Requirement: 18.20/25
Size: 17.76; 18.31; 18.46
Stairway: 16.8; 18.11; 18.20/21; 18.23; 19.2/3; 19.5
Ventilation: 18.33
Vision panels: 18.45
Walls: 18.28; 18.30; 18.33/34; 18.44
Wards: 18.31
Width: 17.76; 18.31

Protected shaft
Definition: Ap 1
Accommodation in: 18.16
Accommodation served: 18.22; 18.24
Atria: 11.44
Building Regs: 18.4; 18.11; 18.16; 18.37
Chute: 18.23; 18.30
Doors: 16.20; 18.11; 20.6; 20.22
Exits: 17.64
Fire resisting construction: 18.4; 18.16
Glazing: 14.7; 18.11
High rise hospitals 11.7
Hospital street: 16.20; 18.21; 18.23
Lifts: 18.4; 18.37; 18.43/44
Mechanical services: 16.20; 18.4; 18.21; 18.24/25; 22.19/20
Protected lobbies: 18.20/26; 18.28/29; 18.33
Protecting structure: see separate entry
Re-entrant angles: Ap 4
Sanitary accommodation: 18.21
Separated externally: 11.12
Stairways: 18.4; 18.11
Transfer grilles: 22.19/20

Protecting structure
Ducts and shutters: 22.15
Fire spread around: 11.12; 11.17
Glazing: 14.7
Protected shaft: see separate entry

Purpose groups
Definition: Ap 1
Building Regs: 4.6/8
Institutional designation: 4.7
Institutional designation exceptions: 4.8
Separate buildings: 4.9
Separation of buildings: 4.10

PVC
(See uPVC pipework; Cables; Plastics materials)

R

Radiation
From one area to another: 4.10/12; 11.17
Through glazing: 10.10

Radio isotopes
Fire hazard rooms: 14.9; 14.12/14
Fire resisting construction: 14.9
Legislation: 14.12

Radiotherapy unit
Radio isotopes: see separate entry
Risk category: Ap 3

Ramps
Car parking: 12.6
Doors: 17.9
Drawings: 23.6
Escape route: 17.4/5; 17,39
External escape route: 17.44; 17.52
Final exit: 17.42/43
Road kerb: 17.51/52
Roof escape route, unenclosed: 17.56
Route: 17.69

Recesses
(See Door recesses)

Re-entrant angles
Requirement: 11.17/20
Detailed requirements: Ap 4
Horizontal fire spread: 11.12
Linking corridors: 4.9
Separation of buildings: see separate entry

Refuse chute
(See Chute)

Refuse collection and disposal
Risk category: Ap 3

Regulations
(See Building regulations; Legislation)

Rehabilitation department
Gymnasium: 9.13
Number of patients: 9.13
Risk of category: Ap 3

Relevant boundary
Distance from: 4.10

Renal unit
Risk category: Ap 3
Other requirements: see Wards; Departments

Residential accommodation
Elderly, physically and mentally handicapped, mentally ill all excluded: 2.3
Purpose Group: 4.10
Staff, risk category: Ap 3; 6.5

Restaurant, staff
Assembly room requirements: 17.73
Number of occupants varies: 17.30

Risks
(See Fire risk; Life risk)

Roads
Access to assembly point: 17.49
Access to site: Ap 5; 5.4
Between buildings: 4.12
Car parking: see separate entry
Crossed by external escape route: 17.51
Design: Ap 5
Drawings: 23.5
Fire hydrant location: 21.24/25
Ramps: 12.6; 17.51/52

Roof
Building Regs: 11.13
Ceilings: 9.9/11; 22.16
Construction to roof escape route: 17.56
Element of structure: 11.14; 17.56
Fire resisting construction: 11.13/14; 12.6; 17.56
Openings: 17.56
Plant rooms: 17.58
Roof escape route, enclosed: see separate entry
Roof light: 17.56
Roof space: see separate entry
Tank rooms: 17.58

Tower and podium situation: 11.13/14
Walls above: 11.13/14
Walls below: 9.9/10; 10.7; 14.2

Roof escape route, enclosed
Accommodation in: 17.60
Bridge escape route: see separate entry
Doors: 8.5; 8.13; 9.5; 17.9; 17.46; 17.59/60; 20.22
Escape route: 17.59/60 and see separate entry
Exits: 8.5; 8.7; 8.13/14; 9.5; 17.59
Fire resisting construction: 8.5; 8.13
Lighting: 17.46
Roof escape route, unenclosed: see separate entry
Stairway: 17.57/58
Travel distance: 8.5; 17.60
Other requirements: see Escape route

Roof escape route, unenclosed
Balustrade: 17.56
Bridge escape route: see separate entry
Doors: 17.9; 17.46
Escape route: 17.56/58 and see separate entry
Exits: 8.5; 8.13/14; 8.22; 8.25/26; 9.5; 9.16; 17.56; 17.64; 17.79/80
Floor: 17.56
Lighting: 17.46
Roof escape route, enclosed: see separate entry
Roof lights: 17.56
Staff use only: 17.57/58
Stairway: 17.59
Width: 17.56; 17.58

Roof light
(See Windows)

Roof space
Cavity barriers: 9.10 and see separate entry
Escape: 17.61/66
Fire alarm call points: 17.63
Fire alarm sounders: 17.63
Fire penetration: 9.11
Sub-compartment means of escape: 17.61
Travel distances: 17.61; 17.65/66

Rooms
Access rooms: see separate entry
Angle of divergence of exit: 17.15
Assembly rooms: see separate entry
Compartment exits through: 8.17; 8.20/23
Escape of occupants only: 17.17
Escape route through: 17.4/5
Exits: 17.15/16
Fire hazard rooms: see separate entry
Inner rooms: see separate entry
Number of occupants: 9.2; 20.12
Open areas off circulation: 17.34/38
Surfaces in small rooms: 11.27

S

Sanitary accommodation and appliances
Appliances: 11.38
Drainage: 11.37/39
Hospital street: 16.19
Protected shaft: 18.21

Screens
(See Glazed screens and panels)

SDU rooms
Fire hazard room: 14.8

Self closing devices
(See Ironmongery)

Separation of buildings
Buildings linked with corridor: 4.9
Building Regs: 4.10/12; 11.21
Courtyards: 4.11; 11.21
Fire appliance access: 4.12
HTM 81 additional requirements: 4.11; 11.21
Radiation: 4.10/12; 11.17
Re-entrant angles: see separate entry

Separate buildings
Definition: 4.8/9; 8.27
Small detached hospital extensions: see separate entry
Used for progressive horizontal evacuation: 4.9

Services accommodation
General: 15.1
Escape routes: 15.4
Fire resisting construction: 14.9
Hazard rooms: 14.9; 14.13/14
Plant rooms: 15.2/5 and see separate entry
Roof space: 17.61/66
Switchrooms: see separate entry
Travel distances: 15.13/16

Service ducts
(See Mechanical services)

Services
(See Mechanical services; Electrical services)

Shape of building
Fire appliance access: Ap 5; 4.12
High rise hospitals: see separate entry
Re-entrant angles: see separate entry
Separation of buildings: 4.9/12; 11.17; 11.21
Tower and podium: 11.13

Shops
Fire certification required: 3.1
Health & Safety Executive notified: 3.4
Number of occupants: 3.1

Shutters
(See Mechanical services)

Signs
Doors to/from courtyards: 17.24/25
Doors on escape route through rooms: 8.23
Doors to lift lobby: 18.45
Doors to protected shaft: 16.20
Doors to rooms of a hazardous nature: 17.16
Doors to switchroom: 14.4
Marking of exits to Fire Precautions Regs (1976): 3.3

Single direction of escape
Acceptibility: 17.13; 17.17
Access rooms: 17.6
Accommodation in: 17.17; 17.37
Angle of divergence of exits: 17.17
Assembly rooms: 17.80
Basement level: 16.17
Courtyards: 17.24
Doors: 17.17/18
Door recesses: 17.19/23
Door swings: 17.17; 20.11
Exits: 16.10; 17.80
Fire hazard rooms: 17.17/18
Fire resisting construction: 17.17/18
Glazed screens/panels: 17.17
Glazing: 10.10; 13.4; 14.7; 17.17
Ground storey level: 16.13
High rise buildings: 11.7
Hospital streets: 16.10/11; 16.13; 16.17; 17.80
Measurement points: 17.70/71
Open areas off: 17.34; 17.37
Overnight stay rooms: 17.17/18
Patient accommodation: 17.17/18
Plant rooms: 15.14/16
Rooms: 17.15; 17.17/18
Single/alternative means of escape junction: 17.17/18
Special precautions: 17.17/18
Staff/visitors sleeping: 17.17/18
Stairway: 16.10; 17.80
Travel distance: 8.25; 9.16; 15.14/16; 16.11; 17.15; 17.17/18; 17.70/71; 17.80
Other requirements: see Escape route

Site
Access: Ap 5; 4.12; 5.4; 21.24/25
Assembly points/positions: 17.48/49
Drawings: 23.5

Fire hydrants location: 21.23/25
High rise on restricted: 11.5
Roads: see separate entry
Separation of buildings: see separate entry
Sloping: 18.12

Size
Area
Bedlift lobby; 18.46
Compartment to Building Regs: 4.6/9
More than 30 patients: 9.13
Occupant capacity: see separate entry
Protected lobby: 18.46
Roofs: 11.13/14
Storey in high rise: 11.5
Storey in small detached extensions: 8.26
Sub-compartment: 9.2; 9.5; 9.13
Switchrooms: 15.11
Wet and dry riser requirements: 21.27
Height
Building Regulations: 11.1
Escape routes: 17.40; 15.13
High rise hospitals: see separate entry
Hospitals: 11.1/14
Ward location in small detached extensions: 8.26
Volume
Building Regs: 11.1
Fire appliance reach: Ap 5
Hospitals: 11.1
Sprinklers: 21.17
Width
Assembly rooms: 9.13; 17.75/76
Circulation space: 17.28/33; 17.38; 17.41; 17.76
Doors: 18.18
Encroached on: 18.11; 18.16; 20.10
Equipment: 17.32; 17.41
Escape route: 17.28/33; 17.41
Hospital street: 16.6
Landings: 18.17
Open areas off circulation: 17.34/38
Protected lobby: 17.76; 18.31; 18.46
Roof escape routes: 17.56; 17.58
Stairways: 17.76; 18.17/19

Small detached hospital extensions
Requirements: 8.26/29

Smoke
Atria: 11.44
Basements: 11.15
Cavities: 11.34
Ceilings: 11.32
Compartments: 8.14; 20.1
Doors: 16.5; 20.1/2
Evacuation: 7.4/9
Fire risk separation: 6.6
High buildings: 11.2
Hospital streets: 16.2/5; 16.9
Lifts: 18.42
Pressurization spread: 16.9
Smoke detectors: 20.16; 20.18; 22.7; 22.17
Stairways unusable: 18.7
Sub-compartments: 9.12; 20.1
Transfer grille shutters: 22.20
uPVC cables: 15.12
Ventilation spread: 16.4; 16.9; 22.2; 22.4/5
Wards: 13.1/2

Soil Pipes
(See Drainage)

Spread of flame
(See Surface spread of flame)

Sprinklers
(See Fixed fire fighting equipment)

Staff
Atria risks: 11.44
Courtyards use: 17.25
Doors, difficulty with: 14.1; 20.3/4; 20.16
Escape from basement external areas: 18.13
Escape from roof space/ceiling void: 17.61/66
Escape from routes: 17.6/7; 17.57/58
Fire hazard rooms: 14.8
Maintenance staff: 17.25; 17.61; 18.13
Observation of patients: 13.1; 17.35
Overnight stay rooms: see separate entry
Supervise wards: 8.23; 9.2: 13.1
Other references: see Occupants

Staff changing
Risk category: Ap 3

Staff training
Aware of means of escape provision: 8.23
Fire safety measure: 7.6/7

Stairway
Accommodation stairway definition: Ap 1; 18.3; 18.12
Escape stairway definition: Ap1
Stairway enclosure definition: Ap 1
General: 7.9; 18.1
Access through another stairway enclosure: 18.15
Basements: 16.12; 16.16/18; 18.12/13; 18.23
BS 5588: 19.4/5
Building Regs: 18.19
Circulation space: 18.11
Distance apart: 16.10/12; 18.35
Doors: 17.9; 18.11; 20.17; 20.19; 22.26
Drawings: 23.6
Enclosure: Ap 1; 18.14/15
Escape route: 17.4/5; 18.11/12; 18.16; 18.47; 19.3
Escape stairways: 18.3
Exit through/from: 8.6/7; 8.11; 8.13/14; 18.25/26; 8.28; 16.8; 16.12; 18.17
Exit in small detached extensions: 8.26; 8.28
Fire Brigade use: 19.1/4
Fire fighting stairway: 19.1/5
Glazing: 18.11
Ground level: 16.10; 18.12; 19.2/3
Hospital street: 16.10/18; 18.8; 18.11/12
Internal walls: 18.14
Landings: 18.17
Linking corridor: 4.9
Local Fire Authority: 11.7; 18.12
Location: 18.13; 18.8; 18.10
Mattresses: 16.10; 17.59/60; 18.17/19
Numbers: 18.2; 18.5/9
Numbers of users: 18.6/9
Obstruction: 18.18
Openings: 18.14
Patients assisted down: 7.9; 18.1
Phased developments: 17.67
Protected escape route: 18.11/12; 18.16; 18.47; 19.3
Protected lobby: 16.8; 18.11; 18.20/21; 18.23; 19.2/3; 19.5 and see separate entry
Protected shaft: 18.4; 18.11 and see separate entry
Roof escape route, enclosed: 17.59
Roof escape route, unenclosed: 17.57/58
Roof plant and tanks: 17.58
Steps: 18.17; 18.19
Storeys: 16.11/12; 16.15/16; 18.6/9; 18.11/12; 19.1/2
Travel distance: 11.7/8; 11.10; 16.10/12; 16.16; 18.35/36; 19.3
Ventilation: 18.14; 18.33
Ventilation outlets: 18.14
Walls: 18.11; 18.14
Wells: 18.17
Width: 17.76: 18.17/19
Windows: 18.11

Statistics
Fires in different parts of hospitals: Ap 2
Hospital bedroom fires: 13.2

Statutory regulations
(See Building regulations; Legislation)

Steps
Escape routes: 17.39; 17.44; 17.56
Exists: 17.42/44
Stairways: 18.17; 18.19

Storage
Basements: 11.16
Certification: 3.1
Combustible materials: 6.7; 16.4
Explosive materials: 3.1
Fire hazard rooms: 14.8
Flammable materials: Ap 3; 3.1; 14.10; 14.12
Gas storage: Ap 3; 14.10; 14.12
Hospital streets: 16.4; 16.21
Main store: Ap 3
Oil storage: 21.14; 21.19; 21.29
Sprinklers: 21.17
Store rooms
  Chemical: 14.8
  Clothes: 14.8
  Linen: 14.8
  Medical gas: Ap 3
  Radio isotopes: 14.9; 14.12/14
  Water: 15.15
Stores department: Ap 3
Switchgear rooms: 15.11

Store rooms
(See Storage)

Stores department
Risk category: Ap 3
Other requirements: see Storage

Storey levels
Basement storeys: see Basement
Compartments in: 8.3/5; 8.11/13
Fire spread: 11.11
Ground storey: see separate entry
High rise hospitals: 11.5/8; 11.10
Lifts: see separate entry
Protected lobbies: 18.25
Small detached extensions: 8.26
Stairways: 16.11/12; 16.15; 18.6/9; 18.11/12
Sub-compartments: 9.2
Upper level storeys
  Hospital streets: 16.3; 16.11
  Number of occupants: 18.6/9
  Plant rooms: 15.3
  Single direction of escape: 16.10/11
  Small detached extensions: 8.26
  Stairways: 16.3; 16.12; 18.7/9; 18.13; 19.1

Streets
(See Hospital street)

Structural expansion joint
(See Expansion joint)

Structural fire precautions
Definition: Ap 1
Building Regs: 4.3; 4.8
Compartmentation: see separate entry
Fire resisting construction: see separate entry
High rise hospitals: see separate entry
HTM requirements: 4.3; 6.1/8; 7.3; 7.10; 8.16/18
Sub-compartmentation: see separate entry

Sub-compartments
Definition: Ap 1
General: 9.1
Ceilings: 9.9/11
Circulation: see separate entry
Compartment, within: 9.1/6
Conterminous with department: 9.15
Doors: 9.12; 20.1; 20.6; 20.22
Drawings: 23.6/7
Escape routes: see separate entry
Exits: 9.5/6; 9.16; 17.14; 17.64; 17.79/80
External walls: 11.12
Fire hazard rooms: 14.1 and see separate entry
Fire resisting construction: 9.7/14; 20.1
Fire spread: 20.1/2
High rise hospitals: 11.6/7; 11.10
Numbers: 9.2; 9.14; 18.40/41
Numbers of patients: 9.2; 9.4; 9.13
Progressive horizontal evacuation: 7.10; 9.1; 9.5
Re-entrant angles: Ap 4; 11.17; 11.20
Roof space: 17.61
Separation externally: 11.12
Size: 9.2; 9.5; 9.13
Smoke spread: 9.12; 20.1
Travel distances: 9.16
Vertical evacuation: 18.1
Ventilation ducts: 22.11
Walls: see Sub-compartment walls
Wards: 8.21/23; 9.2/3

Sub-compartment walls
Cavity construction: 9.8
Ceiling junction: 9.9
Doors: 9.12; 20.1; 20.6; 20.22
Ductwork shutters: 22.11
Electrical services: 9.8
External wall: 11.12
Fire penetration: 20.1
Fire resisting construction: 9.7/8; 20.1; 22.11
Fire stopping: 9.8; 11.31
Glazing: 14.7
Mechanical services: 9.8; 9.12; 22.11; 22.15; 22.19/20
Openings: 9.7; 9.12
Re-entrant angle: 11.17; 11.20
Smoke penetration: 9.12; 20.1
Vehicle damage: 9.8
Wards: 8.21/23

Sub waiting area
Circulation space: 17.35

Substrates
Thin materials or coatings: 11.28

Surface spread of flame
General: 11.22
BS 476: 11.11
Building Regs: 11.11; 11.22/23; 11.26/27
Class of surface: 11.11; 11.23/27
Flame retardants; 11.24/25
Non-combustible materials: 11.24

Suspended ceilings
(See Ceilings)

Switchrooms
Combustible materials: 15.11
Cupboards: 14.4; 15.10/11
Cupboard doors: 14.4; 20.10
Doors: 14.4
Electrical installations separated: 15.8
Electrical services: see separate entry
Fire hazard rooms: 14.8
Fire resisting construction: 15.8
Fixed fire fighting: 21.19
Fusegear cupboards: 14.4
Main electrical gear: Ap 3
Main services accommodation: 15.8
Risk category: Ap 3
Size limited: 15.11

Symbols, fire: 23.8

T

Tank Rooms
Roof escape route: 15.15; 17.58 and see separate entry

Telephone exchange
Risk category: Ap 3

Terminal boxes
Cables, pipes: 9.8

Tests
(see Fire tests)

Theatre sterile supply unit
Fire hazard room: 14.8
Risk category: Ap 3

Thin materials
Test ratings to 11.28

Thresholds
Final exit: 17.42

Timber frames
Intumescent coatings: 10.10

Tower and podium: 11.13

Toxic gases
Atria: 11.44
Basements: 11.15
Flame retardants: 11.25
Transfer grille shutters: 22.20
uPVC cables: 15.12
Ventilation spread: 22.4/5
Wards: 13.1/2

Training
(See Staff training)

Transfer grilles
(see Mechanical services)

Transformer room
(See Plant room)

Travel distance
Definition: Ap 1
General: 17.68
Access rooms: 17.72
Assembley rooms: 17.78/81
Basement: 16.12; 16.16/18
Bridge escape route: 8.5; 17.60
Ceiling void: 17.61; 17.65/66
Compartment: 8.25; 8.28; 16.12; 18.35
Exits: 8.25; 9.16; 11.7/8; 16.12; 17.15; 18.35
High rise hospitals: 11.7/8; 11.10; 16.12
Hospital extensions: 8.28; 11.7/8
Hospital street sub-divisions: 16.8
Measurement points: 8.5; 8.13; 9.5; 17.26; 17.69/72; 17.78
Phased developments: 17.67
Plant rooms: 15.13/16
Roof escape route, enclosed: 17.60
Roof space: 17.61; 17.65/66
Single direction of escape routes: 8.25; 9.16; 17.17/18; 17.70
Small detached extensions: 8.28
Stairways: 11.7/8; 11.10; 16.10/12; 16.16; 18.35/36; 19.3
Sub-compartments: 9.16

Treatment areas
Surfaces: 11.26

TSSU
(See Theatre sterile supply unit)

U

Under building accommodation
(See Basements)

Underground accommodation
(See Basements)

Unprotected areas
Definition: Ap 1
Doors: see separate entry
External escape route near: 17.54
Fire transfer: 11.17/20
Openings: see separate entry
Roof escape route near: 17.56
Tower and podium: 11.13/14
Windows: see separate entry

Upper storeys
(See Storey)

uPVC Pipework
Enclosed to Building Regs: 11.37/38
Modified HTM requirements: 11.38/39

V

Vehicles, hospital
Wall damage: 9.8

Ventilation
(See Mechanical services)
Natural: 16.9

Vertical evacuation
(see Lifts; Stairways)

Vision panels in doors
Access rooms: 17.6
BS 476: 20.7
Escape routes: 20.13
Fire hazard room: 14.4
Fire resisting construction: 20.7
Geriatric wards: 20.13
Inner rooms: 17.6; 20.13
Paediatric wards: 20.13
Protected lobbies: 18.34; 18.45
Protected shaft: 18.11
Wheelchair routes: 20.13
Other requirements: see Glazing

Visitors
(See Overnight stay rooms; Occupants)

Volume
(See Size)

W

Walls
Cavity barriers alignment: 11.36
Ceiling junction: 9.9; 10.7; 13.2; 14.3
Chases: 10.3
Compartment walls: see separate entry
Coronary care unit: 8.19
Ducts: 22.15/16
External walls: see separate entry
Fire hazard rooms: 14.2/7
Fire resisting construction: 8.16; 8.19; 10.2/4; 10.7; 11.7; 11.12; 17.54; 17.56; 17.58; 18.28
Fire shutters: 22.11; 22.15
Fire stopping: 9.8; 10.7; 11.31; 13.2; 14.2/3
Geriatric: 10.7; 13.2; 22.16
Half hour: 10.7
Hospital street subdivision: 16.6/9
Intensive therapy unit: 8.19
Mental illness: 10.7; 13.2; 22.16
Neo natal units: 8.19
One hour: 10.2/6
Openings: 6.2; 9.12; 10.9; 11.14
Operating theatres: 8.19
Solid masonry
  Definition: Ap 1
  Compartment walls: 8.16; 8.19
  Protected lobbies: 18.28, 18.30; 18.33/34; 18.44
  Protected shaft: 18.4
Sub-compartment walls: see separate entry
Surface finishes: 11.11; 11.22; 11.26

Ward
Definition: Ap 1
Access rooms: see separate entry
Changing rooms: 14.8
Circulation space: 8.21/23; 17.26
and see separate entry
Cleaners rooms: 14.8
Cloakrooms: 14.8
Clothes stores: 14.8
Compartment exits: 8.20/23
Compartmentation requirements: 8.3; 8.11; 8.20/23
Coronary care unit: see separate entry

Day rooms: 14.7/8
Doors: 13.1/2
Escape to adjacent ward: 8.21
Evacuation: 13.1/2
Exits/entrances: 8.21/23
Finishing kitchens: 14.8
Fire hazard rooms: 14.7/8 and see separate entry
Geriatric ward, non-acute: see separate entry
Glazing: 10.10; 13.3/4; 17.17/18
High rise hospitals: 11.7/8; 11.10
Inner rooms: see separate entry
Intensive therapy unit: see separate entry
Kitchenette: 14.8
Linen store: 14.8
Locker rooms: 14.8
Maternity ward: Ap 3
Means of escape: 8.20/23; 13.1/4
Medical staff room: 14.8
Mental illness ward, non-acute: see separate entry
Neo natal unit: see separate entry
Number of occupants varies: 17.30/31
Number of patients: 9.2; 13.2
Occupant capacity: 17.30/31
Overnight stay room: see separate entry
Paediatric ward: 20.13
Pantry: 14.8
Protected lobbies: 18.31
Renal unit: Ap 3
Risk category: Ap 3
Sanitary accommodation: see separate entry
Staff changing: Ap 3
Stairways, additional: 18.6
Small detached extensions: 8.26
Smoke spread: 13.1/2
Staff supervision: 8.23; 9.2; 13.1; 17.35
Storage: see separate entry
Sub-compartmentation of: 8.21/23; 9.2/3
Sub-waiting areas: 17.35
Surfaces: 11.26
Switchrooms: see separate entry
Toxic gas spread: 13.1
Treatment areas: 11.26
Wax bathrooms: 14.8
Other requirements: see Departments

Water storage room
(See Tank room)

Wax bathrooms
Fire hazard room: 14.8

Welsh Office
(See references to DHSS)

Wet and dry risers
(See Fixed fire fighting equipment)

Width
(See Size)

Windowless accommodation
(See Basements)

Windows
External escape routes: 17.54
Fire spread: 9.11; 11.3; 11.11; 11.14
Openings: see separate entry
Plastics materials: 11.29
Roof lights near roof escape route: 17.56
Unprotected areas: see separate entry
Windowless accommodation: 11.16
Other requirements: see Glazing

Works department
Risk category: Ap 3

Works officer letter: 14.10

Workshops, occupational therapy
Fire hazard room: 14.8

X

X-ray
(See Diagnostic x-ray)

Printed in the United Kingdom for Her Majesty's Stationery Office.
Dd.0289651, 11/87, C15, 434, 5673.

PUBLICATIONS IN THE FIRECODE SERIES

FIRECODE: *Directory of Fire Documents*
ISBN 0 11 321108 2 November 1987

FIRECODE: *Policy and Principles*
ISBN 0 11 321109 0 November 1987

FIRECODE: *Nucleus Fire Precautions Recommendations*
ISBN 0 11 321117 1 Spring 1988

HEALTH TECHNICAL MEMORANDA (HTM)

FIRECODE: *Fire Precautions in New Hospitals (HTM 81)*
ISBN 0 11 321082 5 November 1987

FIRECODE: *Alarm and Detection Systems (HTM 82)*
ISBN 0 11 321099 X Spring 1988

FIRECODE: *General Fire Precautions (HTM 83)*
ISBN 0 11 321100 7 Spring 1988

FIRECODE: *Fire Precautions in New Old Peoples Homes (HTM 84)*
ISBN 0 11 321101 5 Spring 1988

FIRECODE: *Assessing Fire Risk in Existing Hospital Wards (HTM 86)*
ISBN 0 11 321103 1 November 1987

FIRECODE: *Textiles and Furniture (HTM 87)*
ISBN 0 11 321104 X Spring 1988

FIRECODE: *Fire Precautions in Unsupervised Group Homes (HTM 88)*
ISBN 0 11 321105 8 Summer 1988

FIRE PRACTICE NOTES (FPN)

FPN 1: *Laundries*
ISBN 0 11 321110 4 November 1987

FPN 2: *Storage of Flammable Liquids*
ISBN 0 11 321111 2 November 1987

FPN 3: *Escape Bed Lifts*
ISBN 0 11 321112 0 November 1987

FPN 4: *Kitchens*
ISBN 0 11 321113 9 Autumn 1988

FPN 5: *Boiler and Incinerator Rooms*
ISBN 0 11 321114 7 Autumn 1988

FPN 6: *Laboratories*
ISBN 0 11 321115 5 Autumn 1988

HMSO BOOKS

HMSO publications are available from:

HMSO Publications Centre
(Mail and telephone orders only)
PO Box 276, London, SW8 5DT
Telephone orders 01-622 3316
General enquiries 01-211 5656
(queuing system in operation for both numbers)

HMSO Bookshops
49 High Holborn, London, WC1V 6HB 01-211 5656 (Counter service only)
258 Broad Street, Birmingham, B1 2HE 021-643 3740
Southey House, 33 Wine Street, Bristol, BS1 2BQ (0272) 264306
9-21 Princess Street, Manchester, M60 8AS 061-834 7201
80 Chichester Street, Belfast, BT1 4JY (0232) 238451
71 Lothian Road, Edinburgh, EH3 9AZ 031-228 4181

HMSO's Accredited Agents
(see Yellow Pages)

and through good booksellers

£6.70 net

ISBN 0 11 321082 5